ERGOLUX®

CR2032 PRODUCT DATASHEET

SPECIFICATIONS	
Model No.	CR2032
Nominal Voltage	3 Volts
Capacity（15KΩ/2.0V）	240 mAh
Average Weight	3.2 g
Recommended Drain Around	0.2 mA

MAJOR MATERIALS	
Chemical System	Li-MnO_2
Positive Material	Manganese Dioxide
Negative Material	Lithium
Electrolyte	Organic Solvent

DIMENSIONS (mm)

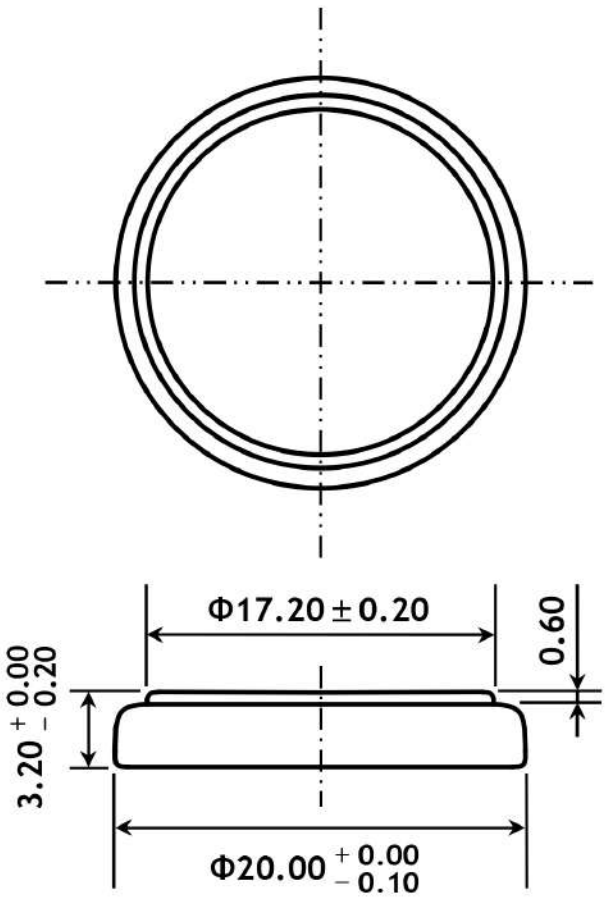

DISCHARGE CHARACTERISTICS

