nuroum®



C20 All-in-one Video Conferencing Camera

User Guide

Package Contents

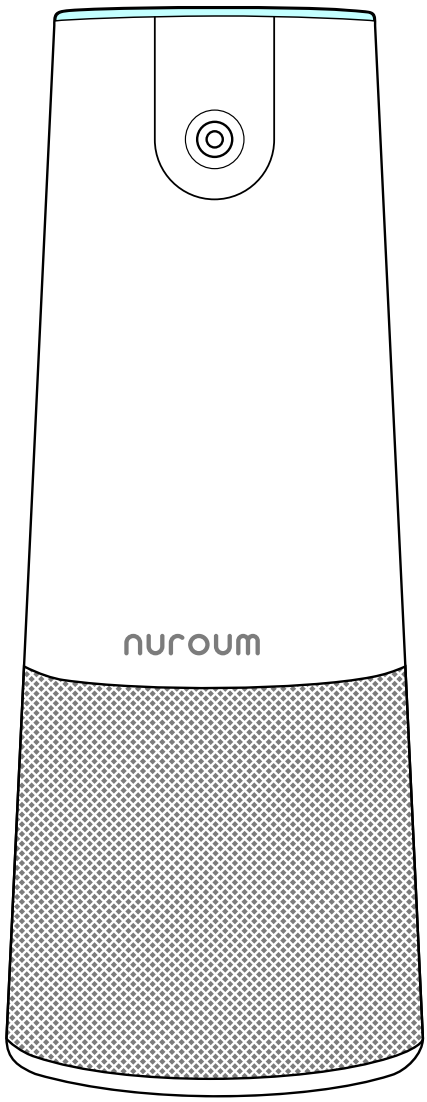

C20 All-in-one Video Conferencing Camera

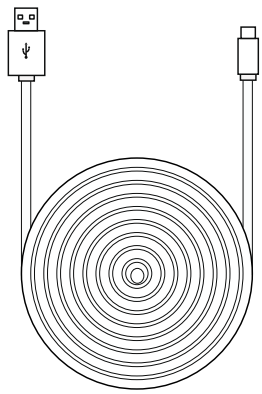

USB-C to USB-A Cable



User Guide

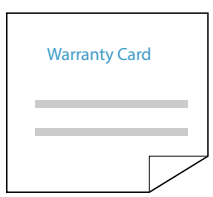

Warranty Card

Functions



100° wide-angle distortionless camera captures all meeting participants clearly.



1080P@30fps Full HD video call.



4-Element omnidirectional microphones array picks up voices with HD quality.



High quality, full range built-in speaker is optimized for human voice.



Up to 13-feet voice pickup radius and uninterrupted full-duplex two-way communication.



AI noise-suppression, echo-cancellation, and competent under various acoustic environments.



Plug & Play, connect to host device via USB.

Product Overview

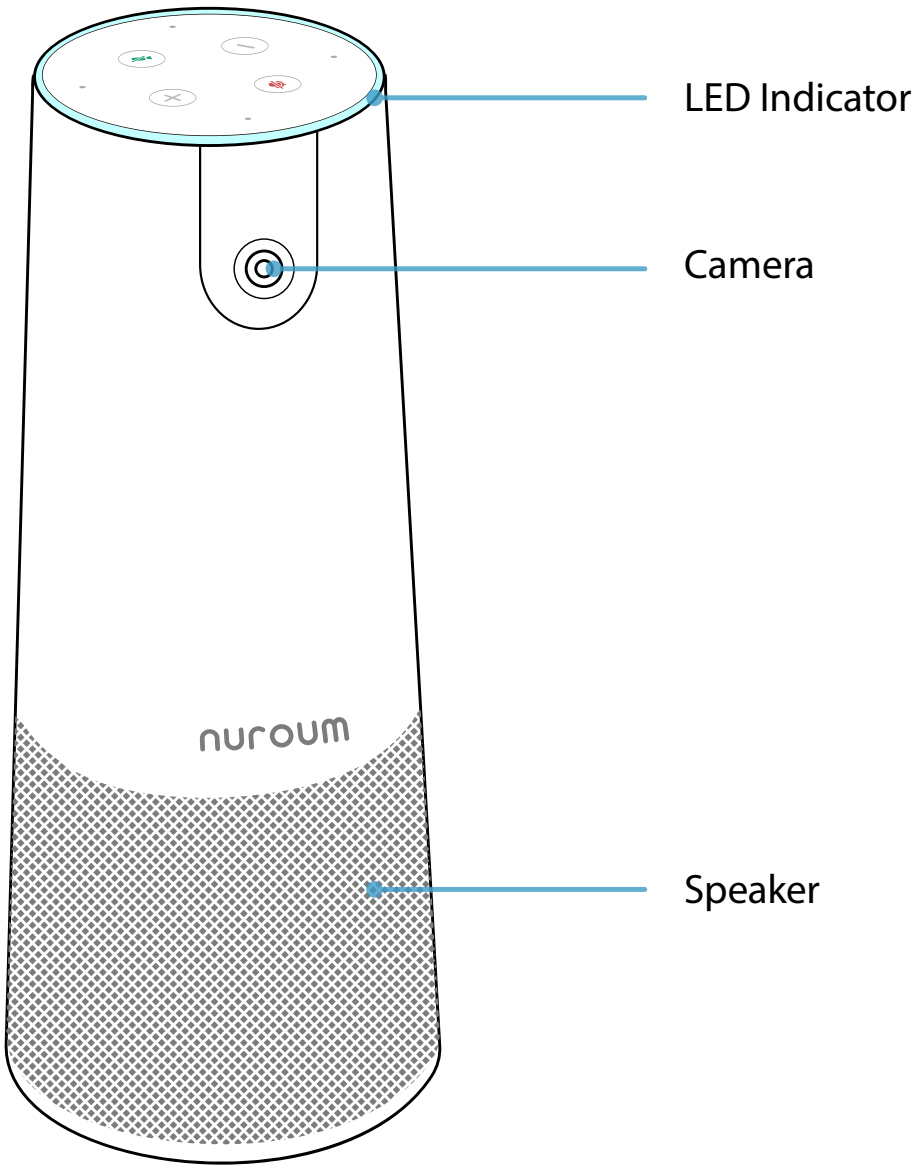

Product Overview

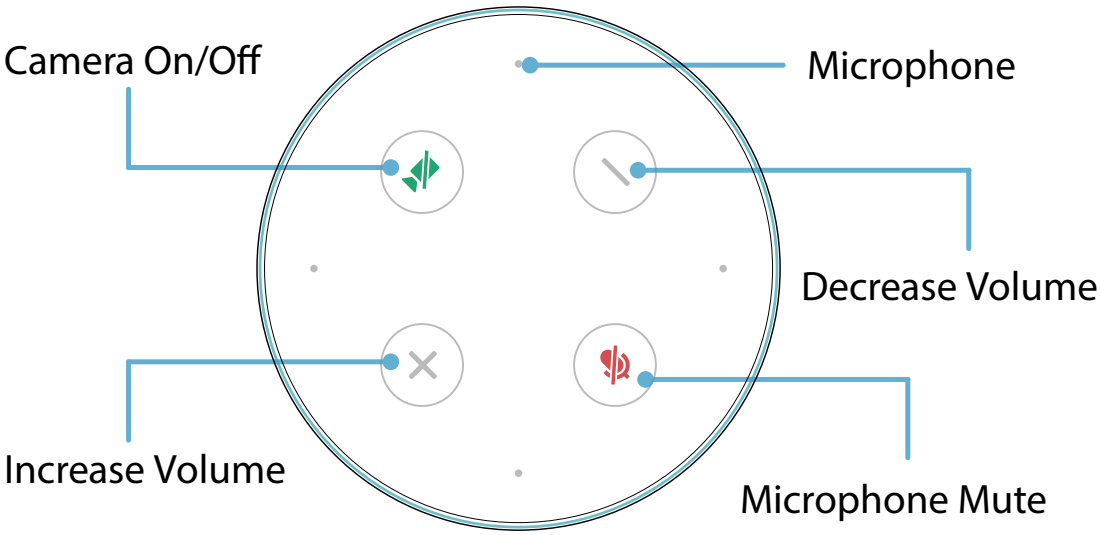

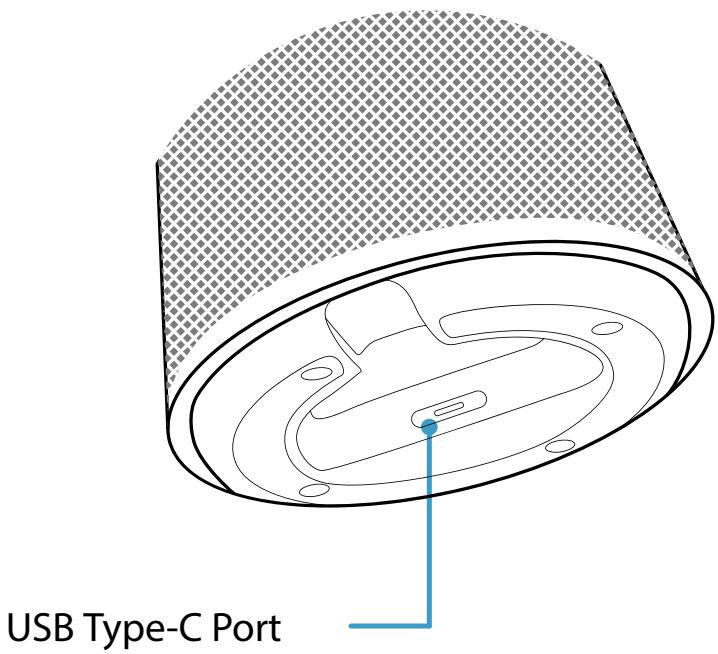

Installation

Easy to use, just place the C20 all-in-one video conferencing camera on the table.

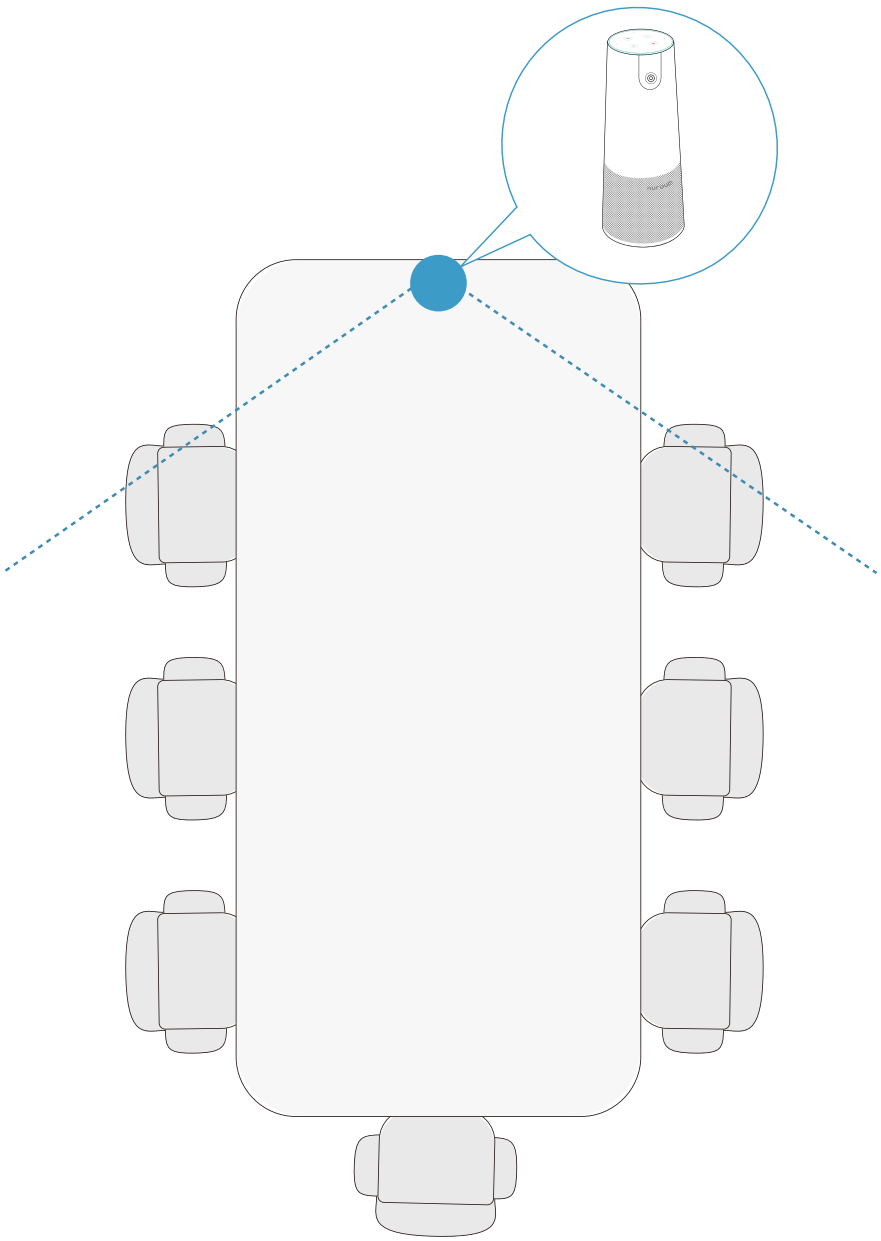

Connecting

Connect C20 to your host device (PC or Mac) via the included USB Type-C cable.

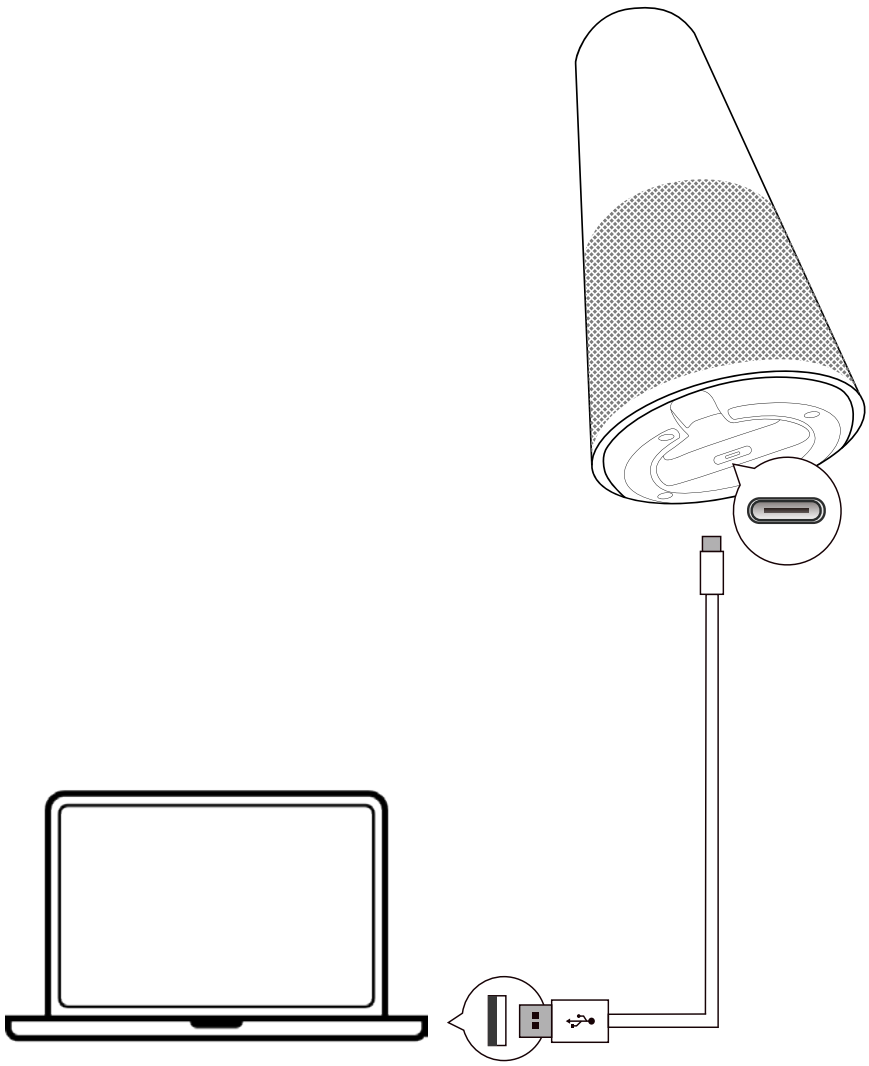

Button Instructions

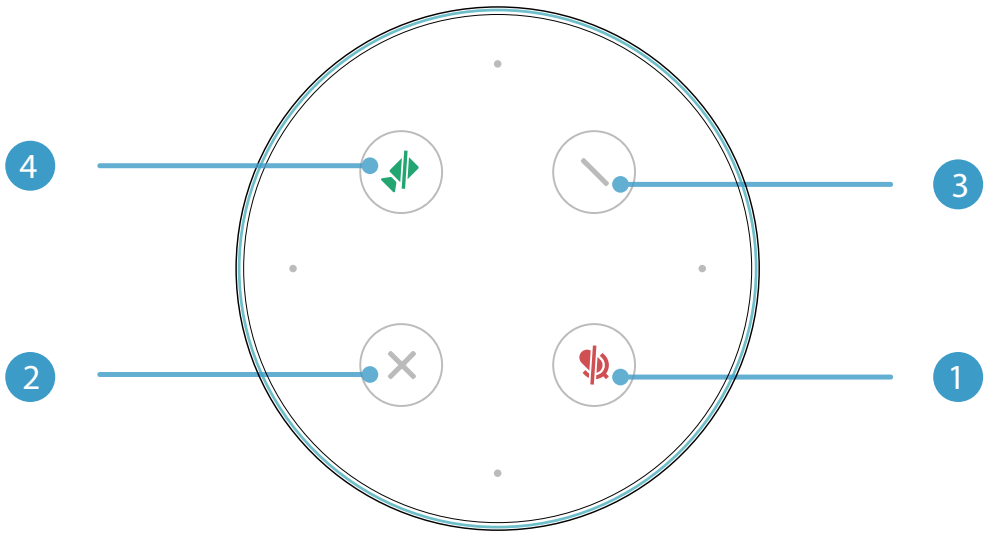

1. Microphone Mute

Touch the button to mute or unmute the microphone.

2. Increase Volume

Touch the button to increase speaker volume.

3. Decrease Volume

Touch the button to decrease speaker volume.

4. Camera On/Off

Touch the button to turn the camera on or off.

LED Indicator

	Power on
	USB device connected
	Microphone muted
	Camera off
	Microphone and camera off
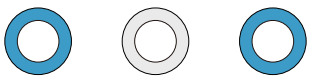	Firmware update is process

*The actual color of the LED indicator may be slightly different from what you see on a printed matter.

Firmware Update



1. Visit www.nuroum.com to download the latest firmware software update (Windows OS Version Only).
2. Connect C20 to your computer and initiate the installed firmware software update.
3. Follow the instructions and finish the firmware update.

Notes & Warnings

Please read and follow all the safety instructions carefully.

1. Use the included USB cable to charge the device.

2. Unauthorized dismantlement and strong impact may damage the device.

3. Keep the device away from high-temperature environments, heat sources, strong magnetic, or electric fields.

4. Do not immerse the device in water or any other liquid. Store it in a dry and cool place.

5. Constant high volume sounds can harm human hearing.

6. Dispose of the packaging materials, device, battery, and other electronic components properly.

7. Do not dismantle, crush, or throw the battery into fire.

8. The packaging and the device contain small components that can be dangerous to children. Please keep them out of children's reach.

9. The device can be an interference source for other electronic devices and medical equipment.

Product Information

Dimensions

- 270mm(H)*110mm(Φ)

Weight

- 618g

Camera Specs

- F/2.4 aperture
- 1080P Video Output
- Horizontal FOV 100°
- Automatic White Balance
- Automatic Exposure
- Fixed Focus

Speaker Specs

- Peak Power :3W
- Speaker Frequency Response: 20Hz ~20kHz
- Speaker Volume: 90dB SPL @0dB 1kHz at 0.5m

Video Specs

- FHD 1080P@30fps
- 16:9 Aspect Ratio
- MJPEG UVC1.1 & UAC

Audio Specs

- 4-element Omnidirectional Microphones Array
- Voice pickup radius up to 13ft/4m with background noise <45 dB.
- For optimal voice pickup result, keep C20 within 6ft/2m range

Connectivity

- USB Type-C

USB Version

- USB 2.0

Input

- 5V ⎓500mA

*The above specifications are subject to change without notice.

nuroum®

FC RoHS

SUZHOU AUDITORYWORKS CO., LTD.
Add: B504, Block 2, Creative Industrial Park,
No. 328, Xinghu Street, SIP, Suzhou , China
Made in China
E-mail: service@nuroum.com
Web: www.nuroum.com