MF120 LITE
MF120 LITE ARGB
MF120 LITE ARGB WHITE EDITION

USER MANUAL

01. PACKAGE CONTENT

A

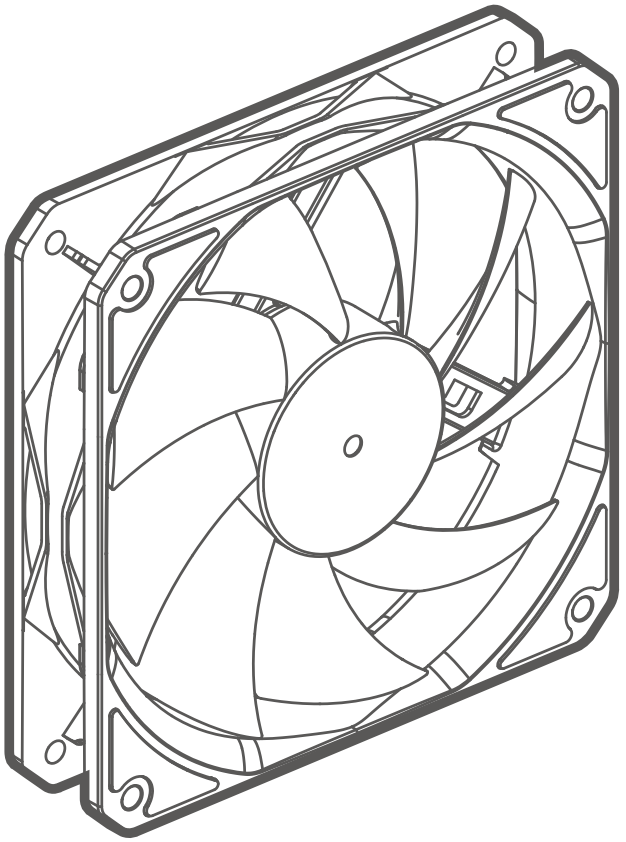

X1

B

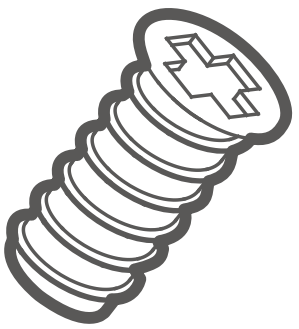

X4

02. CONNECT MOTHERBOARD

MF120 LITE

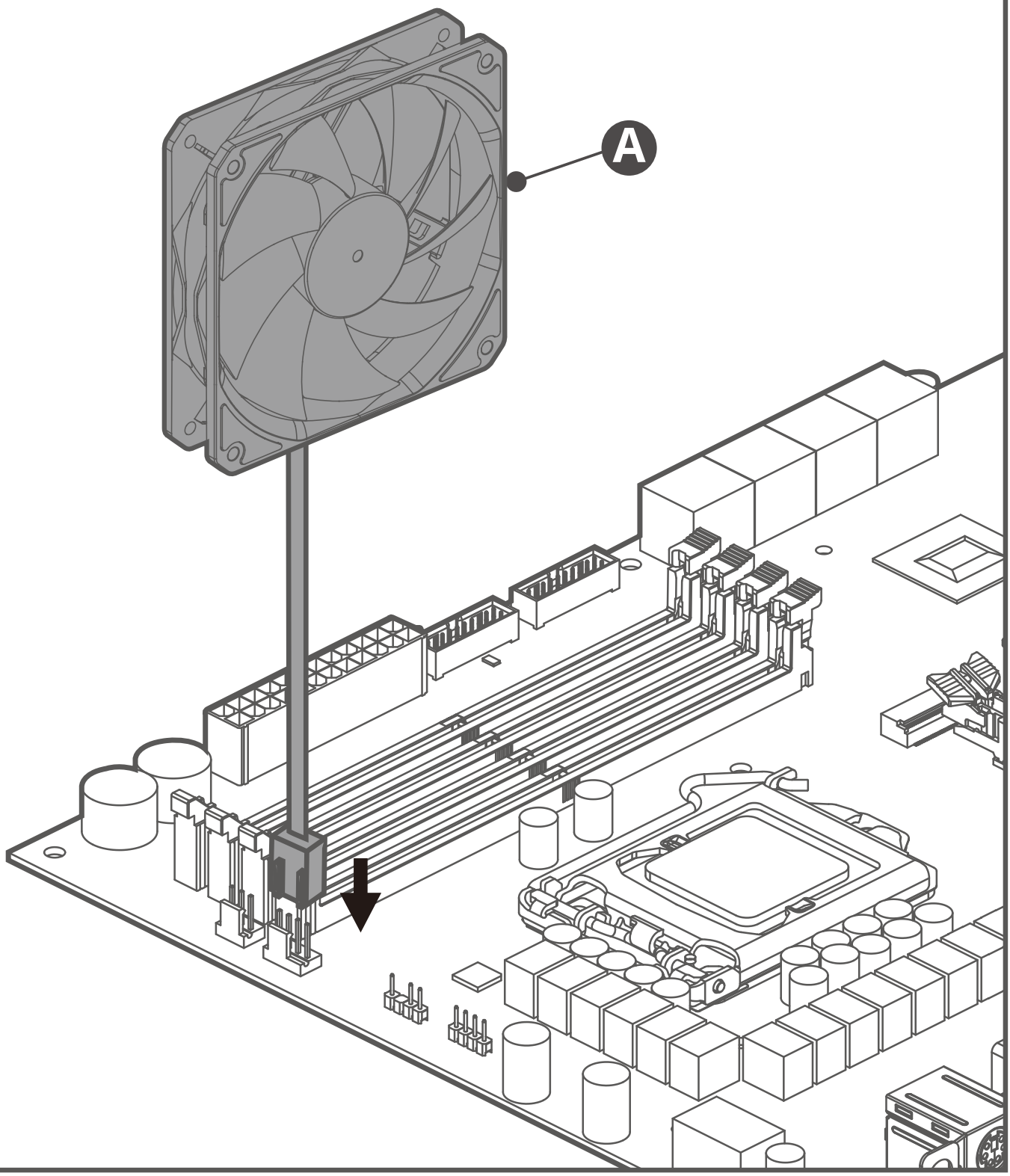

03. CONNECT MOTHERBOARD

MF120 LITE ARGB & MF120 LITE ARGB WHITE EDITION

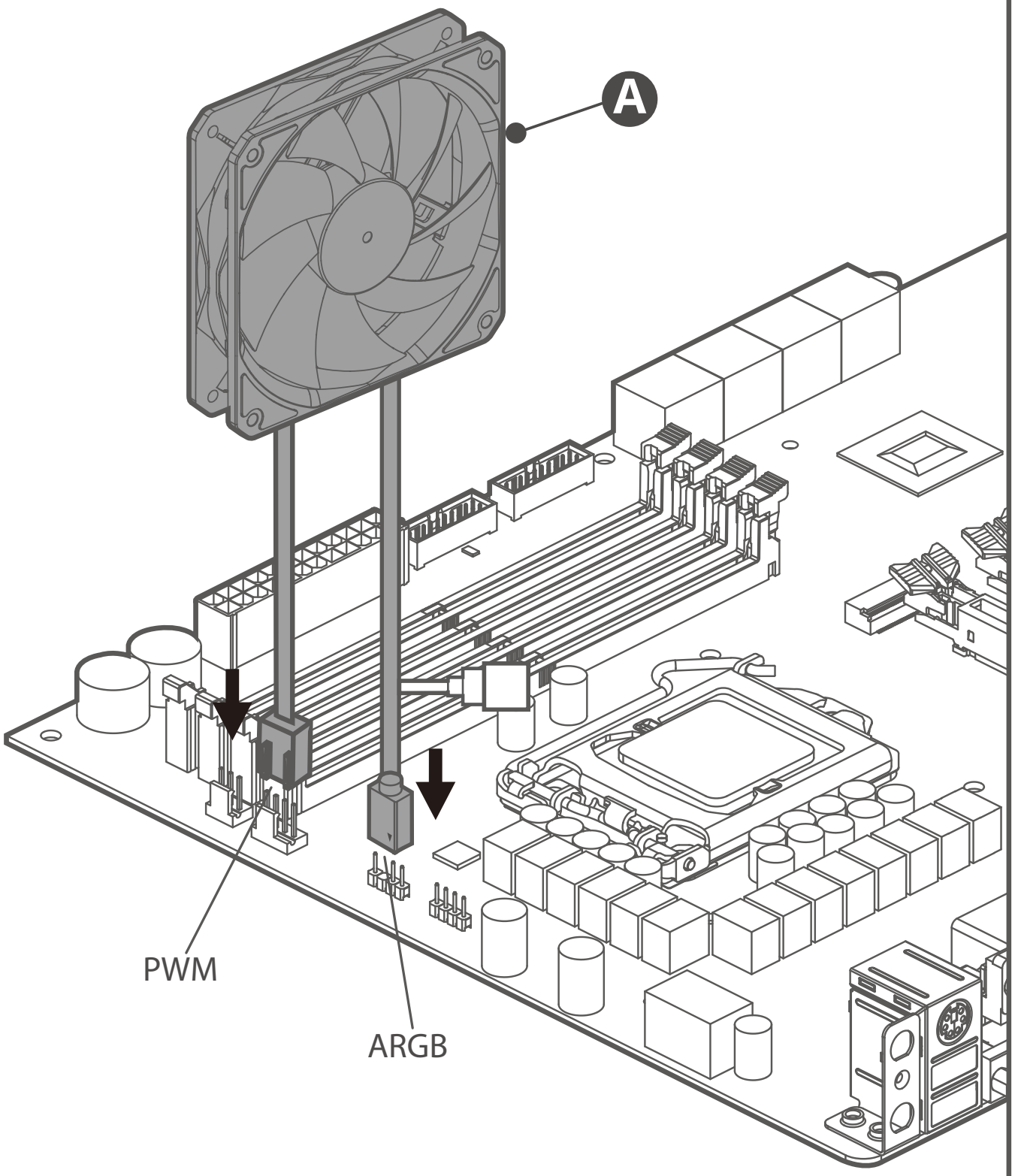

04. FAN INSTALLATION

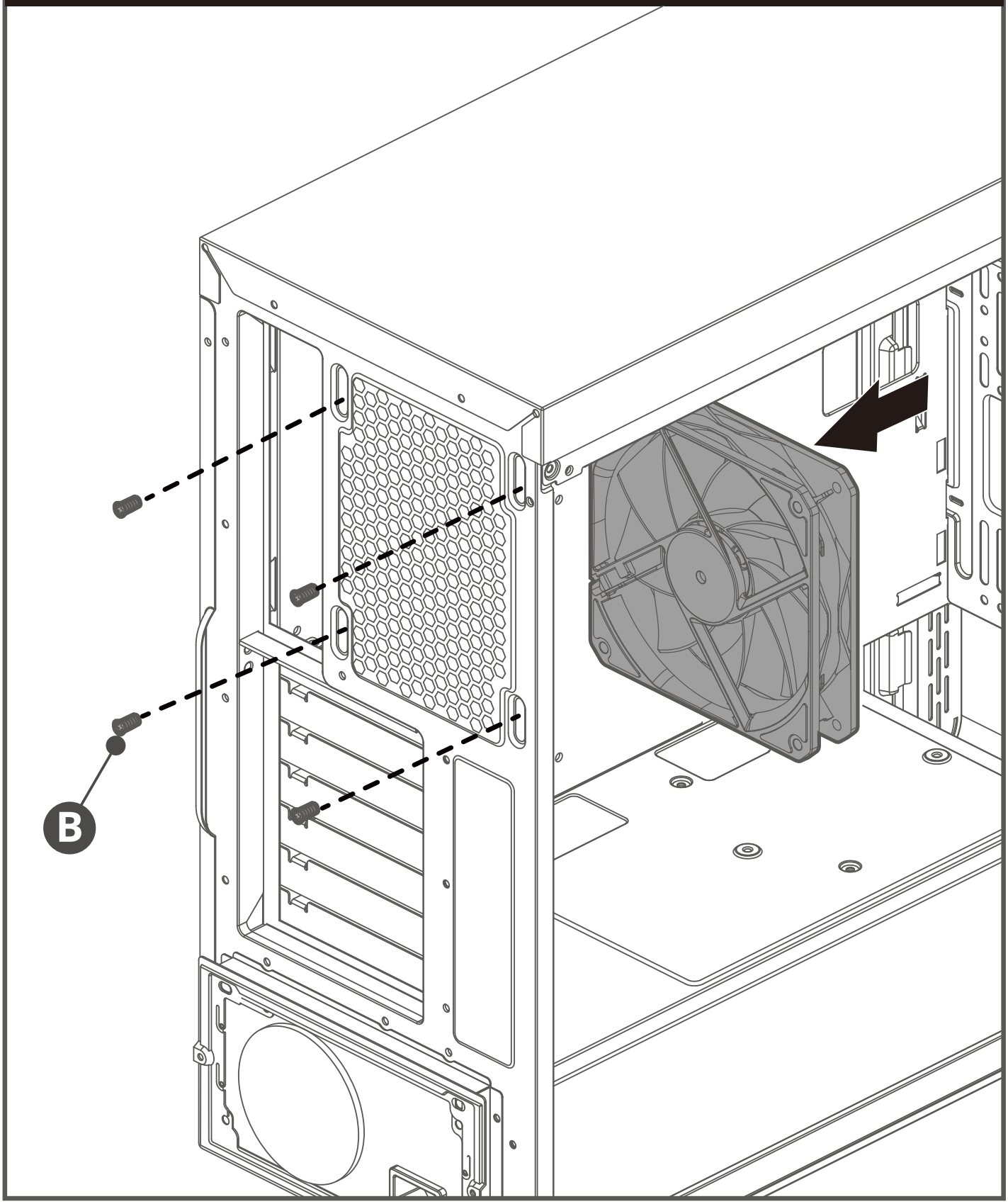

Please visit our website at www.coolermaster.com

China - Cooler Master China
Room 112, Building 9, No. 327, Songjin Road, Jinshanwei Town,
Jinshan Dist., Shanghai City, China
Tel: +86-21-51872177

Europe - Cooler Master Europe B.V.
Lodewijkstraat 1b, 5652AC Eindhoven, The Netherlands
Tel: +31- (0)40-702-0900

North America – Cooler Master NA
1 N Indian Hill Blvd Suite D200, Claremont, CA 91711 U.S.A.
Tel: +1-888-624-5099

For the most updated information, please visit our official website:
www.coolermaster.com /
Cooler Master Support: https://account.coolermaster.com/

V1.0 2024/10
©2024 Cooler Master Technology Inc. All Rights Reserved. All trademarks are registered to their respective owners.