Air Bridge VT Vision

Where Cooling Meets Your Vision

User Guide

formulav-line.com

1

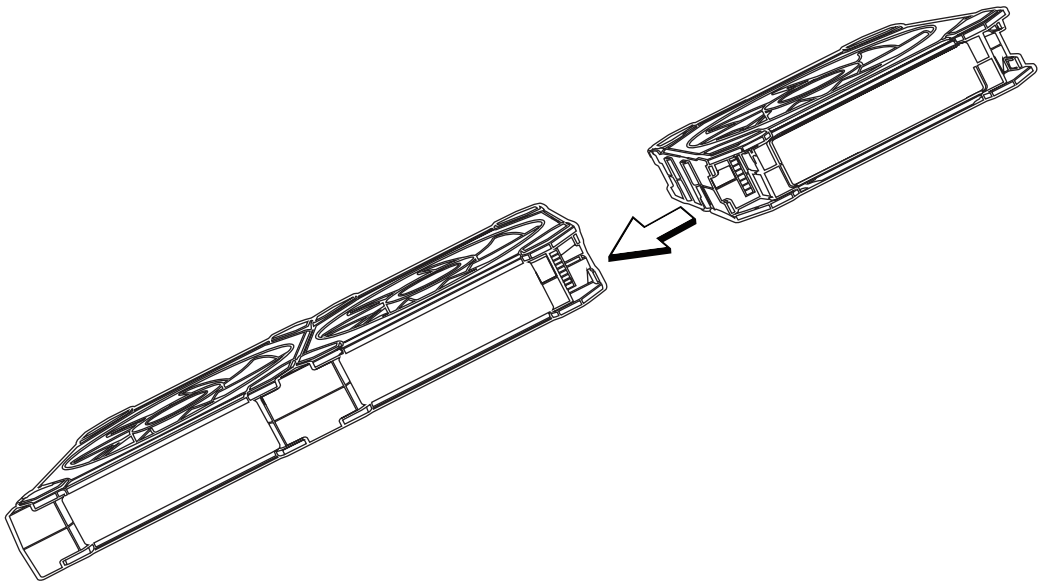

2

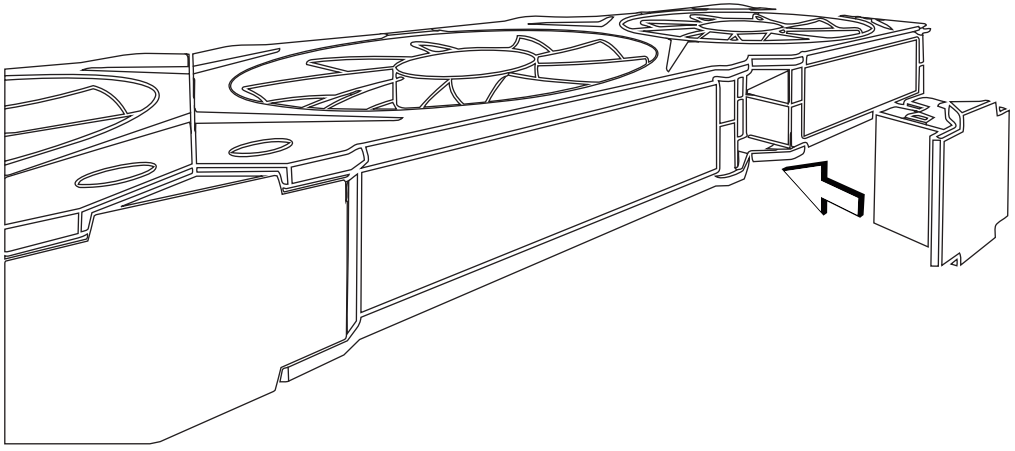

3

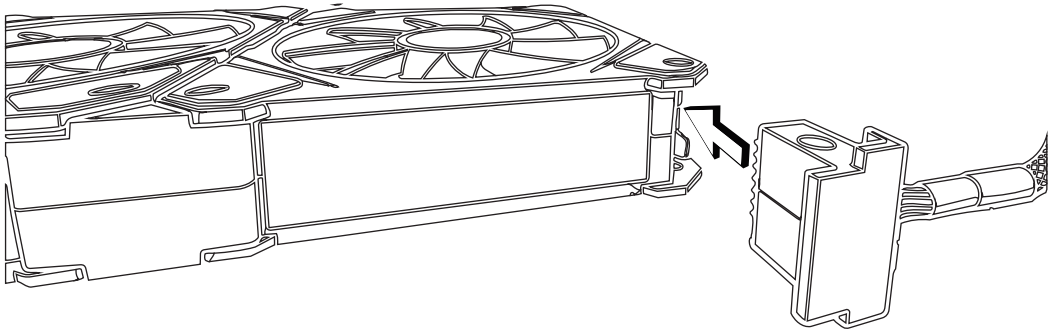

Hub Connection

Connect to fan hub : One Controller, Up to 12 Fans

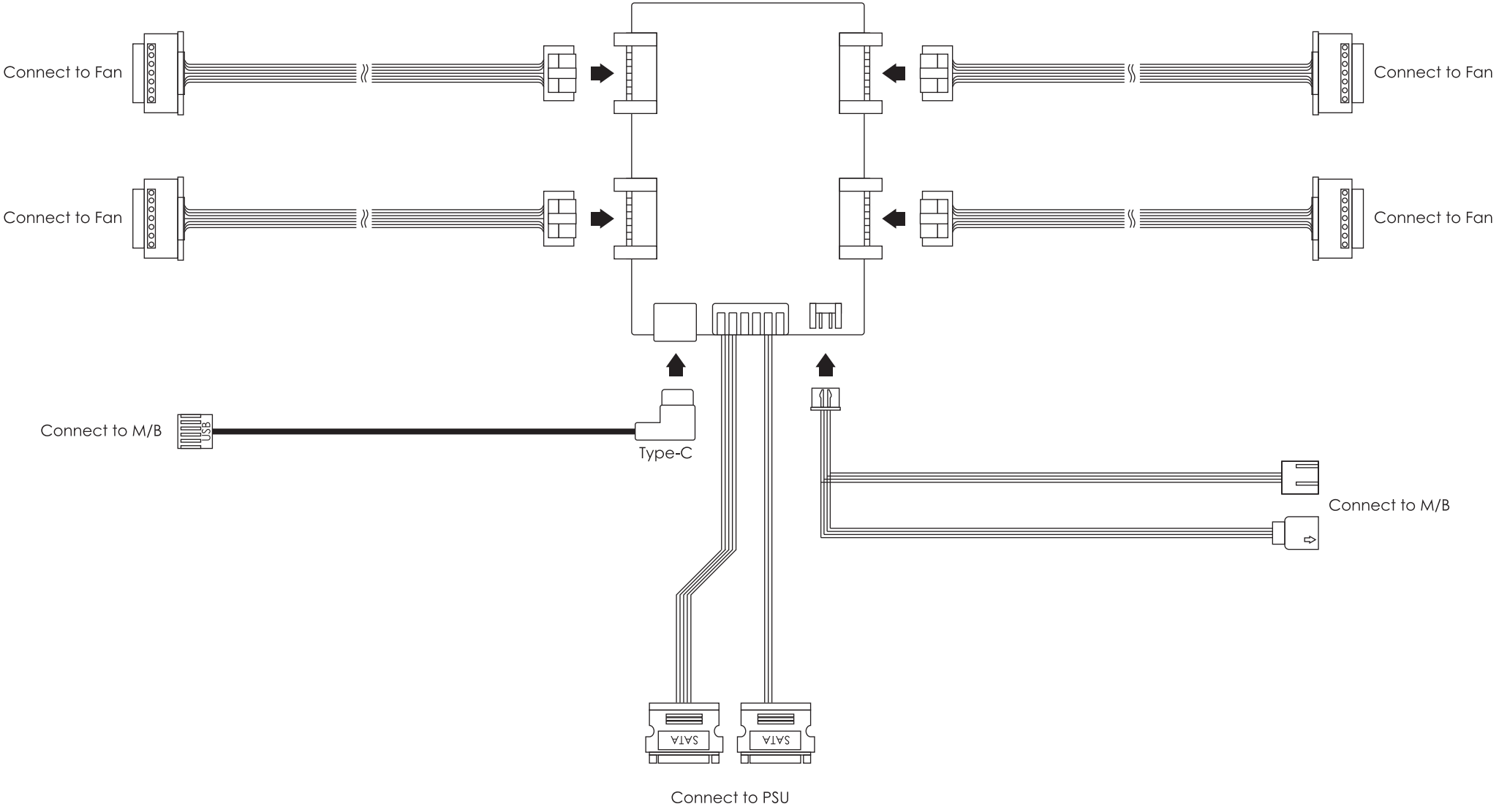

A4 正反-正面雙折

折線不列印 - - - - - -

Air Bridge VT Vision

Where Cooling Meets Your Vision

User Guide

formulav-line.com

1

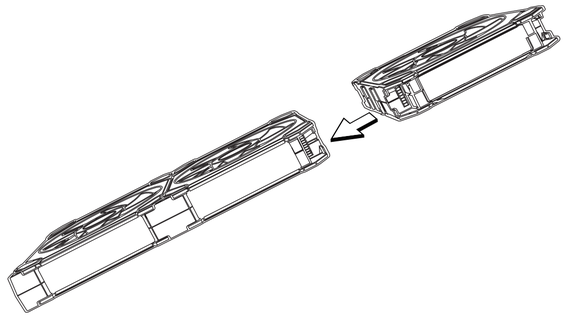

2

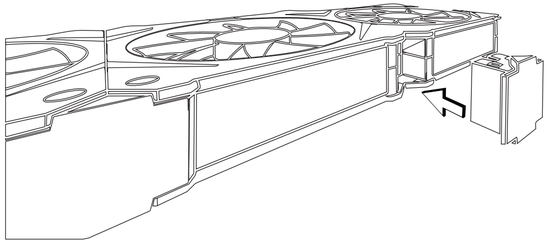

3

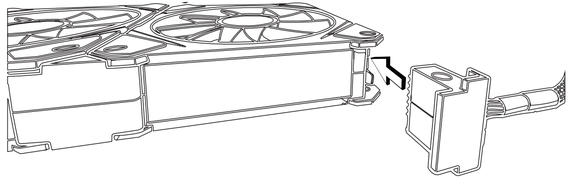

A4 正反-背面雙折

Hub Connection

Connect to fan hub : One Controller, Up to 12 Fans

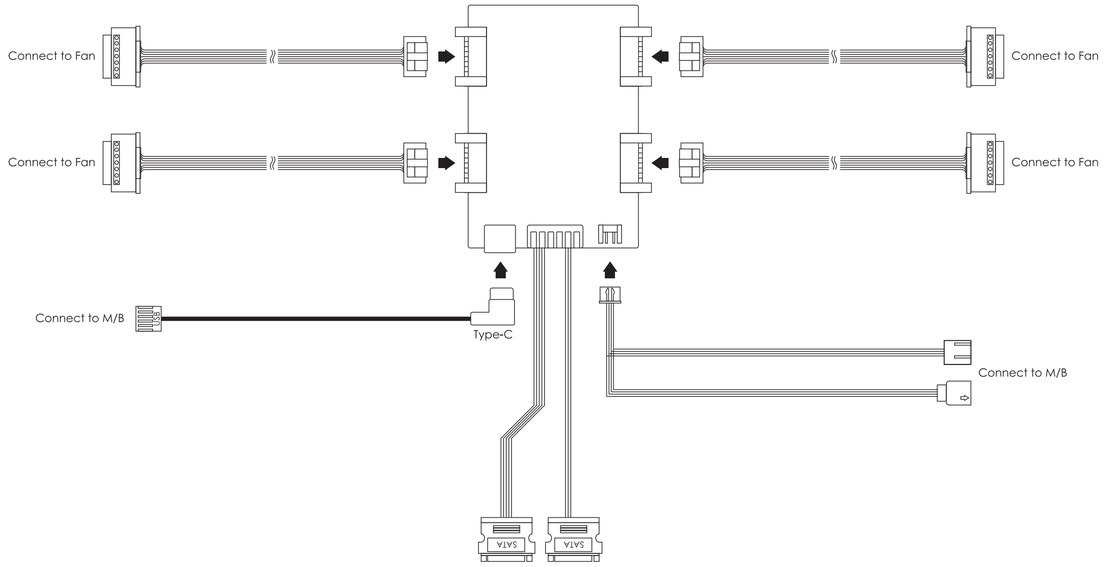

formulav-line.com