BOSCH

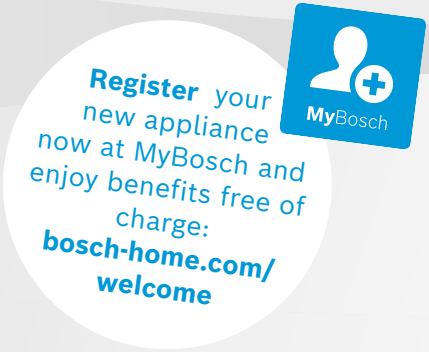

Washer dryer

WKD28260ME

[en] User manual and installation instructions

You can find additional information and explanations online. Scan the QR code on the title page.



Table of contents

1 Safety 3
1.1 Definition of the signal words 3
1.2 General information 3
1.3 Intended use 4
1.4 Restriction on user group 4
1.5 Safe installation 4
1.6 Safe use 6
1.7 Safe cleaning and maintenance 9

2 Preventing material damage 10

3 Environmental protection and saving energy 11
3.1 Disposing of packaging 11
3.2 Save energy and conserve resources 11
3.3 Energy saving mode 11

4 Installation and connection 11
4.1 Unpacking the appliance 11
4.2 Contents of package 11
4.3 Requirements for the installation location 12
4.4 Removing foam parts 13
4.5 Removing the transit bolts 13
4.6 Tools for assembly 14
4.7 Installing the appliance 14
4.8 Connecting the appliance 17

5 Before using for the first time .. 18
5.1 Starting an empty washing cycle 18

6 Familiarising yourself with your appliance 19
6.1 Appliance 19
6.2 Detergent drawer 20
6.3 Control panel 21

7 Display 21

8 Buttons 23

9 Programmes 23

10 Accessories 27

11 Laundry 27
11.1 Preparing the laundry 27
11.2 Care symbols on the care labels 28

12 Detergents and care products 28

13 Basic operation 29
13.1 Switching on the appliance .. 29
13.2 Setting a programme 29
13.3 Saving programme settings 29
13.4 Opening the door 29
13.5 Loading laundry 29
13.6 Adding detergent and care product 30
13.7 Starting the programme 30
13.8 Soaking laundry 30
13.9 Adding laundry 30
13.10 Cancelling the washing programme 30
13.11 Cancelling the drying programme 30
13.12 Unloading the laundry 31
13.13 Switching off the appliance 31

14 Dryness level 31
14.1 Changing the dryness level .. 31

15 Childproof lock 31
15.1 Activating the childproof lock 31
15.2 Deactivating the childproof lock 31

16 Cleaning and servicing 32

16.1 Cleaning the drum and cleaning fluff 32
16.2 Cleaning the detergent drawer 32
16.3 Cleaning the drain pump 33
16.4 Cleaning the rubber gasket .. 35
17 Troubleshooting 35
18 Transportation, storage and disposal 40
18.1 Removing the appliance 40
18.2 Inserting the transit bolts 40
18.3 Using the appliance again 40
18.4 Disposing of old appliance ... 41
19 Customer Service 41
19.1 Product number (E-Nr.) and production number (FD) 41
20 Consumption values 41
21 Technical data 42

⚠ 1 Safety

Observe the following safety instructions.

1.1 Definition of the signal words

This is where you can find explanations for the safety signal words used in this manual.

⚠ WARNING
This indicates that death or serious injuries may occur as a result of non-observance of this warning.

⚠ CAUTION
This indicates that minor or moderate injuries may occur as a result of non-observance of this warning.

ATTENTION
This indicates that damage to the appliance or other material damage may occur as a result of non-compliance with this warning.

Note: This alerts you to important information.

1.2 General information



- Read this instruction manual carefully.
- Keep the instruction manual and the product information safe for future reference or for the next owner.
- Do not connect the appliance if it has been damaged in transit.

1.3 Intended use

Only use this appliance:
- for washing machine-washable fabrics and hand-washable wool in accordance with the care label.
- with tap water and commercially available detergents and care products suitable for washing machines.
- for drying and freshening up fabrics that are washed with water and suitable for dryers.
- in closed rooms in the home and with similar applications, e.g.: in canteens in shops, offices and other work environments; in agricultural businesses; use by customers in hotels, motels and other typical home environments; in bed and breakfasts.
- Up to an altitude of 4000 m above sea level.

1.4 Restriction on user group

This appliance may be used by children aged 8 or over and by people who have reduced physical, sensory or mental abilities or inadequate experience and/or knowledge, provided that they are supervised or have been instructed on how to use the appliance safely and have understood the resulting dangers.
Do not let children play with the appliance.
Cleaning and user maintenance must not be performed by children unless they are being supervised.
Keep children under the age of 3 years and pets away from the appliance.

1.5 Safe installation

⚠ WARNING – Risk of electric shock!
Incorrect installation is dangerous.
- ▸ Connect and operate the appliance only in accordance with the specifications on the rating plate.
- ▸ Connect the appliance to a power supply with alternating current only via a properly installed socket with earthing.
- ▸ The protective conductor system of the domestic electrical installation must be properly installed. The installation must have a sufficiently large cross section.

- When using a residual current circuit breaker, only use a type with the mark.
- Never equip the appliance with an external switching device, e.g. a timer or remote control.
- Never connect the appliance to a circuit that is regularly switched on and off by the energy supplier.
- When the appliance is installed, the mains plug of the power cord must be freely accessible. If free access is not possible, an isolating switch must be integrated into the permanent electrical installation according to the installation regulations.
- When installing the appliance, check that the power cable is not trapped or damaged.

If the insulation of the power cord is damaged, this is dangerous.

- Never let the power cord come into contact with hot appliance parts or heat sources.
- Never let the power cord come into contact with sharp points or edges.
- Never kink, crush or modify the power cord.

⚠ WARNING – Risk of fire!

It is dangerous to use an extended power cord and non-approved adapters.

- Do not use extension cables or multiple socket strips.
- Only use adapters and power cords approved by the manufacturer.
- If the power cord is too short and a longer one is not available, please contact an electrician to have the domestic installation adapted.

⚠ WARNING – Risk of injury!

The heavy weight of the appliance may result in injury when lifted.

- Do not lift the appliance on your own.

⚠ WARNING – Risk of suffocation!

Children may put packaging material over their heads or wrap themselves up in it and suffocate.

- Keep packaging material away from children.
- Do not let children play with packaging material.

⚠ CAUTION – Risk of injury!

The appliance may vibrate or move when in use.

- ▸ Place the appliance on a clean, even, solid surface.
- ▸ Align the appliance using the appliance feet and a spirit level.

If hoses and power cords have been laid incorrectly, this causes a tripping hazard.

- ▸ Lay hoses and power cords in such a way that there is no risk of tripping.

If the appliance is moved by holding onto protruding components, such as the appliance door, the parts may break off.

- ▸ Do not move the appliance by holding onto protruding parts.

⚠ CAUTION – Risk of cutting!

Touching sharp edges on the appliance may lead to cuts.

- ▸ Do not touch the sharp edges on the appliance.
- ▸ Wear protective gloves when installing and transporting the appliance.

1.6 Safe use

⚠ WARNING – Risk of electric shock!

If the appliance or the power cord is damaged, this is dangerous.

- ▸ Never operate a damaged appliance.
- ▸ Never pull on the power cord to unplug the appliance. Always unplug the appliance at the mains.
- ▸ If the appliance or the power cord is damaged, immediately unplug the power cord or switch off the fuse in the fuse box and turn off the water tap.
- ▸ Call customer service. →*Page 41*

An ingress of moisture can cause an electric shock.

- ▸ Only use the appliance in enclosed spaces.
- ▸ Never expose the appliance to intense heat or humidity.
- ▸ Do not use steam- or high-pressure cleaners, hoses or sprays to clean the appliance.

⚠ WARNING – Risk of harm to health!
Children can lock themselves in the appliance, thereby putting their lives at risk.
- ▸ The appliance must not be set up behind a lockable door, a sliding door or a door with a hinge on the side opposite to the appliance, which prevents appliance from opening fully.
- ▸ With redundant appliances, unplug the power cord. Then cut through the cord and damage the lock on the appliance door beyond repair so that the appliance door will no longer close.

When spinning larger, waterproof items of laundry, imbalances may arise and lead to injuries.
- ▸ Do not wash and spin larger items of laundry, such as blankets or mattress covers, in the appliance.

⚠ WARNING – Risk of suffocation!
Children may breathe in or swallow small parts, causing them to suffocate.
- ▸ Keep small parts away from children.
- ▸ Do not let children play with small parts.

⚠ WARNING – Risk of explosion!
If there is coal dust or flour in the air around the appliance, this may cause an explosion.
- ▸ Keep the area around the appliance clean during operation.

⚠ WARNING – Risk of poisoning!
Detergents and care products may result in poisoning if consumed.
- ▸ If accidentally swallowed, seek medical advice.
- ▸ Keep detergents and care products out of the reach of children.

⚠ WARNING – Risk of explosion!
Highly flammable objects such as lighters or matches may ignite during the drying process.
- ▸ Remove all highly flammable objects from any pockets in your laundry before the drying process.

Unwashed laundry may ignite during drying.
- ▸ Do not dry laundry in this appliance if the laundry has not been washed first.

- If laundry has been contaminated with substances such as cooking oil, acetone, alcohol, petrol, kerosene, stain-remover, turpentine, wax and wax-remover, wash it in hot water with an additional quantity of detergent before drying it in the appliance.
- Rinse the laundry thoroughly with warm water and detergent before drying it in the machine.
- Do not use the appliance if industrial chemicals have been used to clean the laundry beforehand.

Laundry that has been pretreated with flammable cleaning agents that contain solvents may cause an explosion in the appliance.

- Rinse pretreated laundry thoroughly with water before washing.

⚠ WARNING – Risk of fire!

If drying is interrupted early, the laundry is not cooled sufficiently and may ignite.

- Do not interrupt the drying programme early.
- If drying is interrupted early, remove the laundry immediately and spread it out.

⚠ CAUTION – Risk of injury!

The covering plate may break if you stand on or climb onto the appliance.

- Do not stand on or climb onto the appliance.

The appliance may tip over if you sit on or lean against the open door.

- Do not sit on or lean against the appliance door.
- Do not place any objects on the appliance door.

Reaching into the drum while it is still turning may cause hand injuries.

- Wait for the drum to come to a complete stop before reaching inside.

⚠ CAUTION – Risk of scalding!

When you wash at high temperatures, the detergent solution gets hot.

- Do not touch the hot detergent solution.

⚠ CAUTION – Risk of chemical burns!
If the detergent drawer is opened, detergent and care products may spray out from the appliance.
Contact with eyes or skin may cause irritation.
- ▸ Rinse eyes and/or skin thoroughly with clean water if they come into contact with detergents or care products.
- ▸ If accidentally swallowed, seek medical advice.
- ▸ Keep detergents and care products out of the reach of children.

1.7 Safe cleaning and maintenance

⚠ WARNING – Risk of electric shock!
Improper repairs are dangerous.
- ▸ Never make any technical modifications to the appliance or its features.
- ▸ Repairs to the appliance should only be carried out by trained specialist staff.
- ▸ Only use genuine spare parts when repairing the appliance.
- ▸ If the power cord of this appliance is damaged, it must be replaced by the manufacturer, the manufacturer's Customer Service or a similarly qualified person in order to prevent any risk.

An ingress of moisture can cause an electric shock.
- ▸ Before cleaning, pull out the mains plug or switch off the fuse in the fuse box.
- ▸ Do not use steam- or high-pressure cleaners, hoses or sprays to clean the appliance.

⚠ WARNING – Risk of injury!
The use of non-original spare parts and non-original accessories is dangerous.
- ▸ Only use the manufacturer's original spare parts and original accessories.

⚠ WARNING – Risk of poisoning!
Poisonous fumes may be given off if you use cleaning agents that contain solvents.
- ▸ Do not use cleaning agents that contain solvents.

2 Preventing material damage

ATTENTION

The functionality of the appliance may be impaired if you use the wrong quantity of fabric softener, detergent, care product or cleaning agent.

- Follow the dosage recommendations from the manufacturer.

Exceeding the maximum load capacity impairs the function of the appliance.

- Observe the maximum load capacity for each programme and do not exceed it. →*Page 23*

Foam and foam rubber may deform or melt during the drying process.

- Objects such as foam rubber (latex foam), shower caps, waterproof textiles, rubberised items and clothing or cushions with sponge rubber padding must not be dried in the appliance.

The appliance is secured for transportation using transit bolts.

Transit bolts which have not been removed may result in material damage and damage to the appliance.

- Before starting up the appliance, remove the transit bolts completely and keep them in a safe place.
- Before transport, fit the transit bolts fully in order to prevent damage in transit.

Material damage may be caused if the water inlet hose is connected incorrectly.

- Tighten the screw connections on the water inlet until they are hand-tight.
- Connect the water inlet hose directly to the water tap, without any additional connecting elements such as adapters, extensions or valves.
- Ensure that the inner diameter of the water tap is at least 17 mm.
- Make sure that the length of the thread on the connection to the water tap is at least 10 mm.

If the water pressure is too high or too low, the appliance may not be able to operate properly.

- Ensure that the water pressure in the water supply system is at least 100 kPa (1 bar) and max. 1000 kPa (10 bar).
- If the water pressure exceeds the maximum value specified, a pressure-reducing valve must be installed between the water connection and the hose set of the appliance.
- Do not connect the appliance to the mixer tap of an unpressurised hot-water boiler.

Modified or damaged water hoses may result in material damage and damage to the appliance.

- Never kink, crush, modify or cut through water hoses.
- Only use the water hoses supplied with the appliance or genuine spare hoses.
- Never re-use water hoses that have been used before.

Operating the appliance using water that is dirty or too hot may lead to material damage and damage to the appliance.

- Only operate the appliance with cold mains water.

Unsuitable cleaning products may damage the surfaces of the appliance.

- Do not use harsh or abrasive detergents.
- Do not use cleaning products with a high alcohol content.

- ▸ Do not use hard scouring pads or cleaning sponges.
- ▸ Clean the appliance with nothing but water and a soft, damp cloth.
- ▸ Remove all detergent residue, spray residue or other residues immediately if they come into contact with the appliance.

3 Environmental protection and saving energy

3.1 Disposing of packaging

The packaging materials are environmentally compatible and can be recycled.

- ▸ Sort the individual components by type and dispose of them separately.

3.2 Save energy and conserve resources

If you follow these instructions, your appliance will use less electricity and less water.

- Choose programs with low temperatures and longer wash times and use maximum load capacity. →*Page 23*
- Add detergent based on the laundry's degree of soiling.
- Reduce the washing temperature for lightly and normally soiled laundry.
- Set the maximum spin speed if you want to dry the laundry in the appliance afterwards.

3.3 Energy saving mode

If you do not use the appliance for a brief period, it automatically switches to energy-saving mode.
Energy-saving mode ends when you use the appliance again.
If you do not use the appliance for an extended period, it switches itself off.

4 Installation and connection

4.1 Unpacking the appliance

ATTENTION
Objects remaining in the drum that are not designed for operation with the appliance may cause material damage and damage to the appliance.

- ▸ Remove these objects, along with all supplied accessories, from the drum before starting the appliance.

1. Remove any packaging and protective covers completely from the appliance. →*Page 11*
2. Check the appliance for visible damage.
3. Open the door. →*Page 29*
4. Remove any accessories from the drum.
5. Close the door.

4.2 Contents of package

After unpacking all parts, check for any damage in transit and completeness of the delivery.

ATTENTION
If the appliance is operated with incomplete or defective accessories, the appliance may not be able to operate properly, or this may result in material damage or damage to the appliance.

- ▸ Do not operate the appliance with incomplete or defective accessories.
- ▸ Replace the accessories in question before operating the appliance.
  → *"Accessories", Page 27*

Note: The appliance has undergone a function test at the factory. This may cause water stains in the appliance, which the first wash cycle removes.

The delivery consists of the following:
- Washer dryer
- Accompanying documents
- Transit bolts →*Page 13*
- Cover caps
- Water inlet hose →*Page 17*
- Parts for the installation →*Page 14*

4.3 Requirements for the installation location

⚠ WARNING
Risk of electric shock!
The appliance contains live parts. Touching live parts is dangerous.
- ▸ Do not operate the appliance without a cover cap.

ATTENTION
If residual water in the appliance freezes, this may cause damage to the appliance.
- ▸ Do not install or operate this appliance anywhere that is liable to experience frost or outdoors.

If the appliance is tilted at an angle greater than 40°, residual water may leak out of the appliance and cause material damage.
- ▸ Tilt the appliance carefully.
- ▸ Transport the appliance in an upright position.

Installation location	Requirements
Base 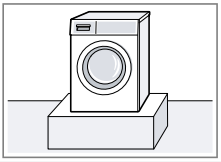	Secure the appliance with fixing brackets.
Wooden joist floor 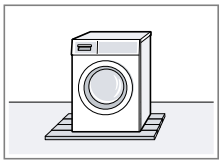	Place the appliance on a water-resistant wooden board (minimum thickness of 30 mm) which is screwed tightly to the floor.
Kitchen unit 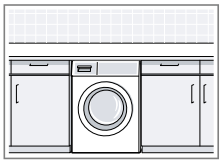	Only install the appliance underneath a continuous worktop that is securely connected to adjacent cabinets. Required niche width: 60 cm. **Note:** The use of sliding plates makes it easier to slide the appliance into the recess. Moisten the sliding plates with a mixture of water and washing-up liquid before pushing the appliance in. Do not use grease or oil to do this. → *"Accessories", Page 27*
Against a wall 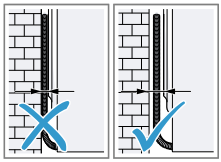	Do not trap the power cord or the hoses between the wall and the appliance.

4.4 Removing foam parts

To prevent transport damage, the appliance is protected with foam parts at the factory. Remove the foam parts before switching on the appliance.

⚠ WARNING
Risk of injury!
When the appliance is tilted, the appliance may tip over.
- ▸ Tilt the appliance carefully.
- ▸ Do not tilt the appliance on your own.

ATTENTION
If the foam material is not removed, it can cause damage to the appliance when it is operated.
- ▸ Before starting up the appliance, remove all foam parts.

1. Tilt the appliance backwards.

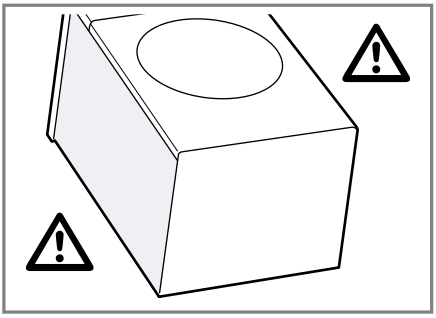

2. Remove the foam parts on the underside.

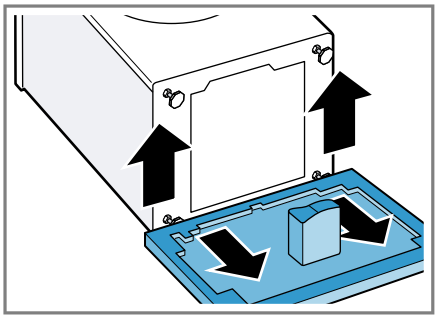

Do not dispose of the foam parts. Use the foam parts when transporting the appliance in the future.

Note: To insert the foam parts for transportation into the appliance, perform these steps again in the reverse order.

4.5 Removing the transit bolts

The appliance is secured for transportation using transit bolts on the rear of the appliance.

Note: Keep the transit bolt screws and the washers in a safe place for future transport.

Requirement: The foam parts are removed. →*Page 13*

1. Pull the hose out of the holders.
2. Unscrew ① and remove ② all of the screws for the 4 transit bolts using a WAF 13 wrench.

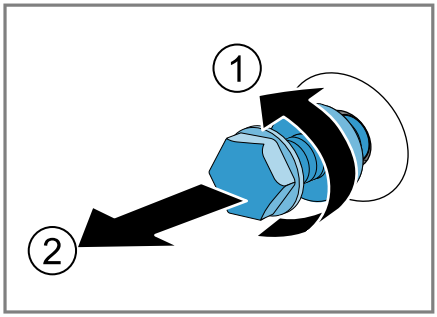

3. Remove the power cable from the holder.
4. Put on the 4 cover caps.

Note: To install the transit bolts to transport the appliance, perform these steps again in the reverse order.

4.6 Tools for assembly

You require the following tools for the assembly:

- Spirit level
- WAF 13 wrench
- WAF 17 wrench
- Forstner 38 mm drill bit
- 2 mm twist drill
- Screwdriver

4.7 Installing the appliance

Preparing the appliance

1. Measure the built-in niche.

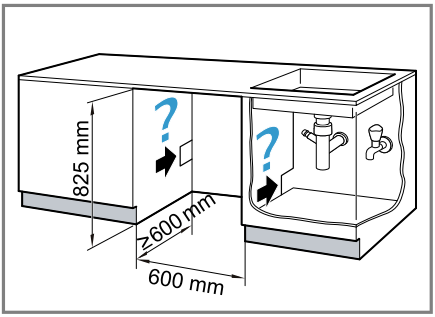

2. Lay the power cord as well as the water inlet and water outlet hose.
3. Slide the appliance in and, at the same time, pull through the power cord, water inlet and water outlet hose.

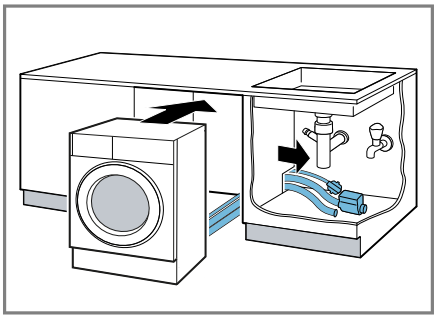

4. Connect the water inlet hose. → *Page 17*
5. Connect the water outlet hose. → *Page 17*
6. Align the appliance using a spirit level.

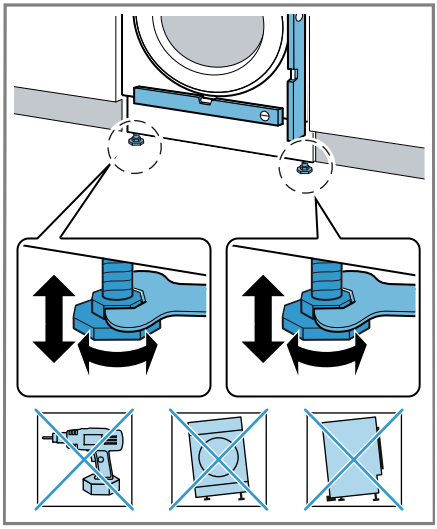

Installing the cabinet door

Note: Metal elements may impair the function of the control panel.
Do not use any cabinet doors with metal elements in the area of the control panel.

1. Hold the cabinet door at the required height on the appliance and

mark the upper edge of the appliance on the inside of the door.

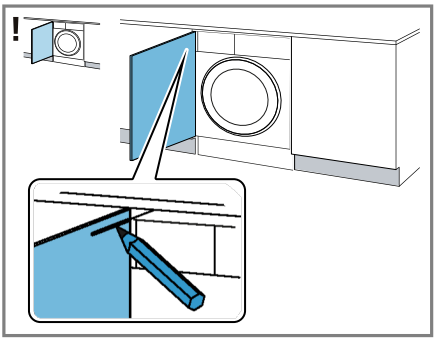

Mark on the top edge of the appliance at the left-hand stop

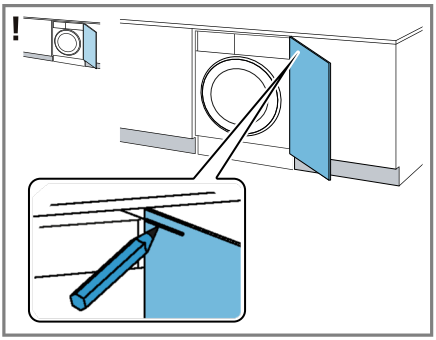

Mark on the top edge of the appliance at the right-hand stop

2. Mark the drill holes on the inside of the cabinet door using the enclosed template.
   - ▸ Place the template for the drill holes on the mark for the top edge of the appliance.

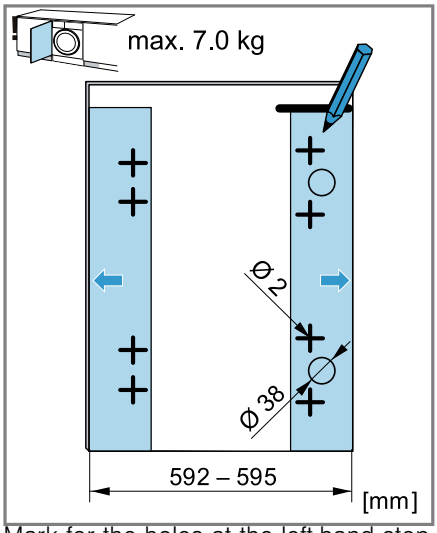

Mark for the holes at the left-hand stop

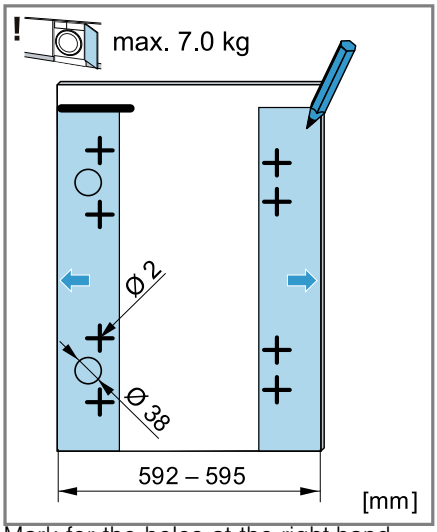

Mark for the holes at the right-hand stop

3. At the previously marked points, use a Forstner 38 mm drill to drill

the holes for the hinges. At the previously marked points, use a 2 mm twist drill to drill holes for the screws.

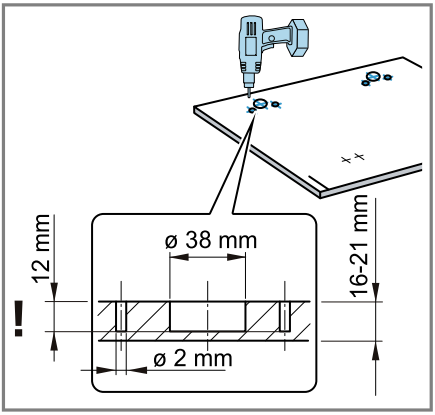

4. Insert the hinges into the holes and screw them in.

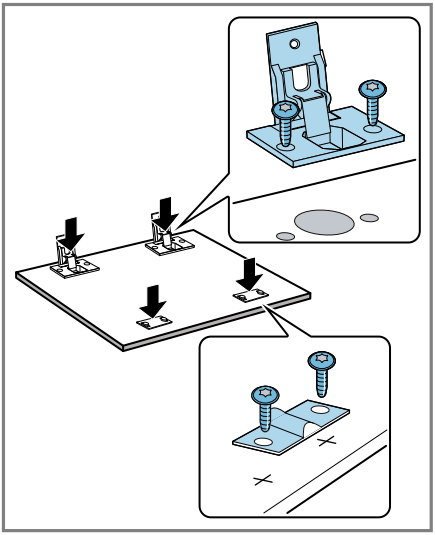

5. Screw on the counter plates for the magnetic catches.

6. Install the cabinet door on the appliance.

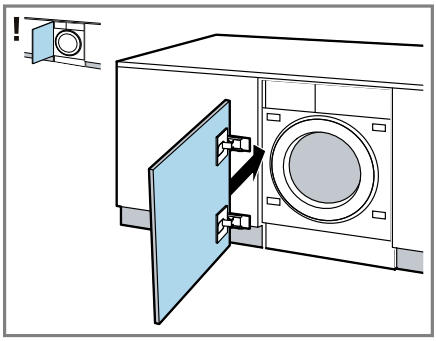

7. Put the magnetic catches on the appliance.

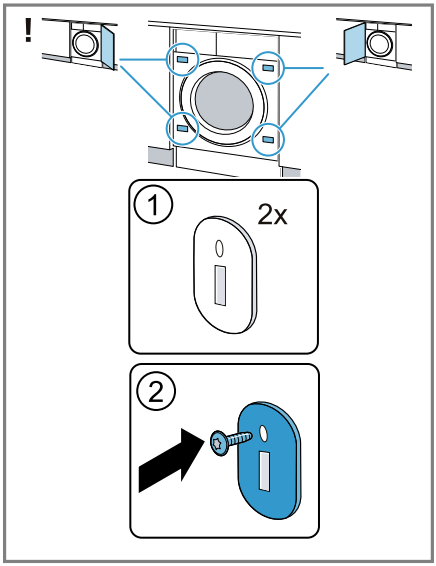

Aligning the cabinet door

Vertically aligning the cabinet door

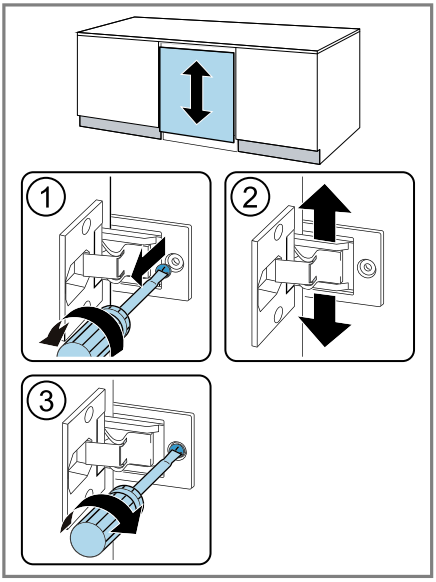

Horizontally aligning the cabinet door

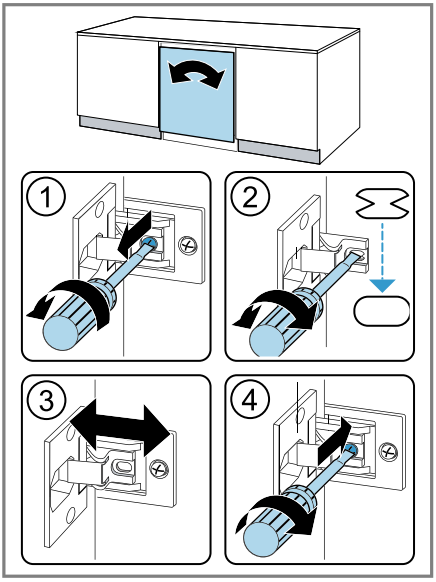

4.8 Connecting the appliance

Connecting the water inlet hose

ATTENTION

Material damage may be caused if the water inlet hose is connected incorrectly.

- ▸ Tighten the screw connections on the water inlet until they are hand-tight.

1. Connect the water inlet hose.

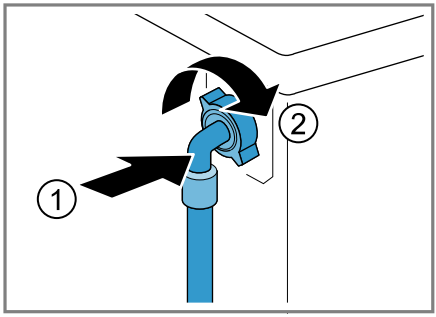

2. Connect the water inlet hose to a tap (26.4 mm = 3/4").

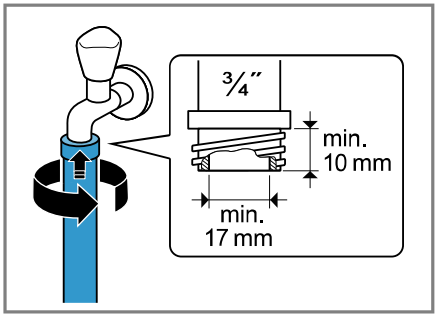

3. Open the water tap carefully and check that the connection points are tight.

Water outlet connection types

This information is intended to help you to connect this appliance to the water outlet.

ATTENTION
When draining, the water outlet hose is subject to water pressure and may come loose from the installed connection point.
- ▸ Secure the water outlet hose against unintentional loosening.

In the event of a blocked or covered outlet, accumulated wastewater can flow back into the appliance.
- ▸ Before operating the appliance, ensure that the wastewater drains away quickly and eliminate any blockages.

Note: To avoid exceeding the maximum draining height of the appliance, do not lay the water outlet hose lower than 60 cm or higher than 100 cm above the installation surface of the appliance at any point.

Siphon 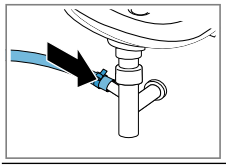	Secure the connection point with a (24–40 mm) hose clamp.
Sink 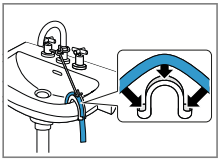	Fix and secure the water outlet hose with an elbow. → *"Accessories", Page 27*
Plastic pipe with rubber sleeve 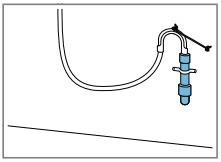	Fix and secure the water outlet hose with an elbow. → *"Accessories", Page 27*

Connecting the appliance to the electricity supply

Note: Your electrical domestic installation for this appliance must comply with the local legal provisions and safety regulations, and should include a residual current circuit-breaker.

1. Insert the mains plug of the appliance's power cable in a socket nearby.
   The connection details of the appliance can be found under Technical data →*Page 42*.
2. Check the mains plug is inserted properly.

5 Before using for the first time

Prepare the appliance for use.

5.1 Starting an empty washing cycle

Your appliance was inspected thoroughly before leaving the factory. To remove any residual water, run the first wash cycle without any laundry.

1. Press ⏻.
   The switch-on process takes a few seconds.
2. Set the **Drum Clean** programme.
3. Close the door.
4. Pull out the detergent drawer.
5. Pour approx. 1 litre of tap water into compartment II.

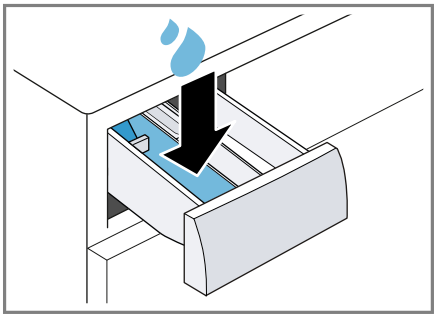

6. Add washing powder containing oxygen bleach to compartment II.

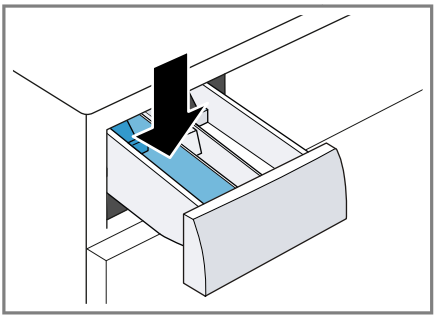

To prevent foaming, use only half of the amount of detergent recommended by the detergent manufacturer for light soiling. Do not use detergent suitable for woollens or delicates.

7. Push in the detergent drawer.
8. Start the programme. →*Page 30*
9. Start the first wash cycle or press ⏻ to switch off the appliance. → *"Basic operation", Page 29*

6 Familiarising yourself with your appliance

6.1 Appliance

You can find an overview of the parts of your appliance here.

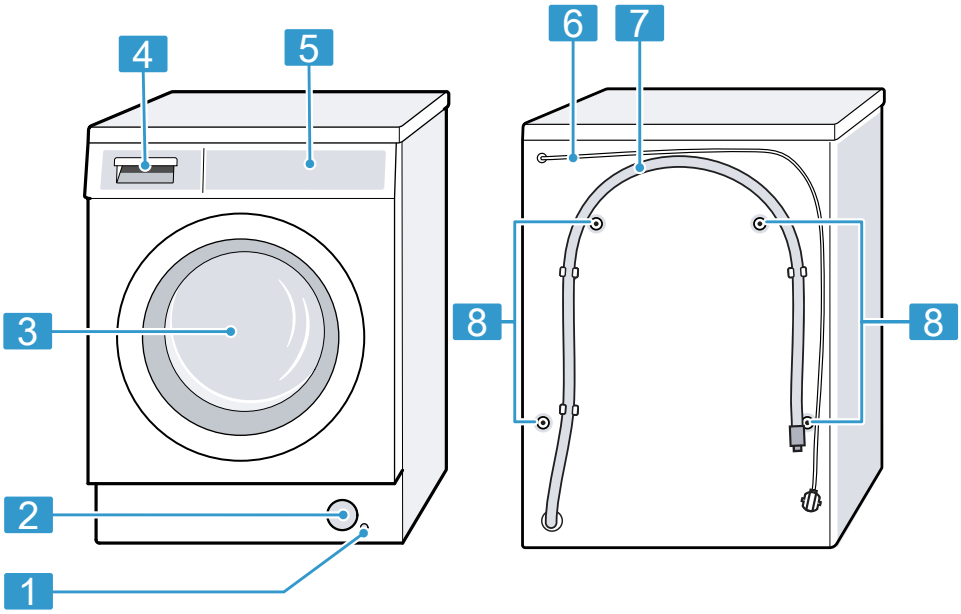

On certain models, specific details such as the colour and shape may differ from those pictured.

1	Drain hose →*Page 33*
2	Maintenance flap for the drain pump →*Page 33*
3	Door →*Page 29*
4	Detergent drawer →*Page 20*
5	Control panel →*Page 21*
6	Power cord →*Page 18*
7	Water outlet hose →*Page 17*
8	Transit bolts →*Page 13*

6.2 Detergent drawer

Note: Observe the manufacturer's instructions on the use and dosage of the detergent and care product and the information in the programme descriptions.

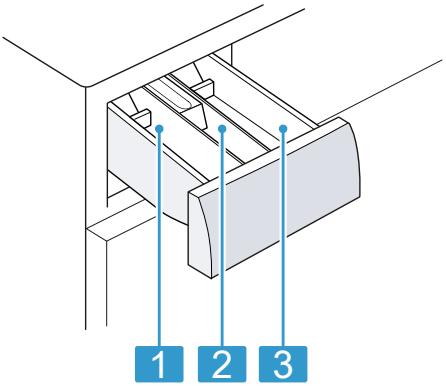

1	Compartment II: Detergent for the main wash
2	Compartment ❀: Fabric softener
3	Compartment I: Detergent for prewash

6.3 Control panel

You can use the control panel to configure all functions of your appliance and to obtain information about the operating status.

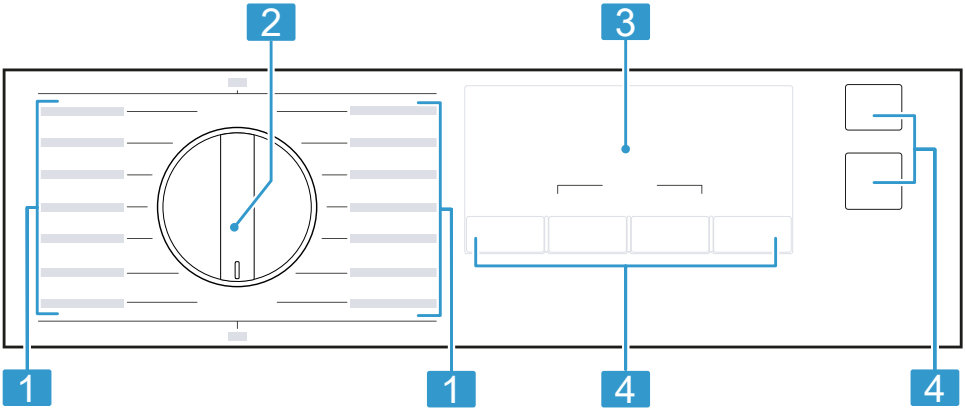

1	Programmes →*Page 23*
2	Programme selector →*Page 29*
3	Display →*Page 21*
4	Buttons →*Page 23*

7 Display

The display shows the current settings, options or relevant information.

Depending on the programme status, the display shows some information in the 88:88 area, e.g. End.

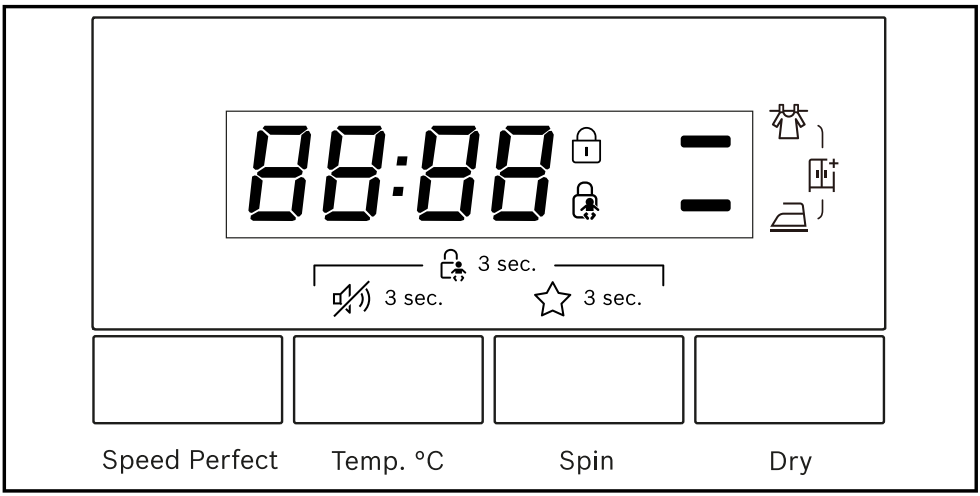

Example: Display

Display	Description
0:40 [1]	Expected programme duration or programme time remaining in hours and minutes.
10h [1]	Programme end time
00:00 - 1400	Set spin speed in rpm. →*Page 23* 00:00 : No spin cycle, draining only
0 - 90	Set temperature in °C. →*Page 23* 0 (cold)
End	Programme status: Programme end
	▪ Lights up: The childproof lock is activated. ▪ Flashes: The childproof lock is activated and the appliance has been operated. →*Page 31*
=	The dryness level is activated. →*Page 31*
=	The dryness level is activated. →*Page 31*
=	The dryness level is activated. →*Page 31*
	▪ Lights up: The door is locked and cannot be opened. ▪ Off: The door is unlocked and can be opened.

[1] Example

8 Buttons

The selection of programme settings and options to change these depend on the programme that is set as well as the programme status.

Button	Description
⏻	Switch the appliance on or off.
Temp. °C	Adjust the temperature.
Spin	Adjust the spin speed or deactivate the spin cycle. If 00:00 is selected, the water is drained and the spin cycle is deactivated. The laundry stays wet inside the drum.
▷||	Start or pause the programme.
Speed Perfect	Activate or deactivate a shorter programme duration. **Note:** The energy consumption increases. The washing result is not affected by this.
3 sec.	Activate or deactivate the childproof lock. →*Page 31*
☆ 3 sec.	Save your individual programme settings. →*Page 29*
3 sec.	If you press and hold the button for approximately 3 seconds, you can activate or deactivate operating signals and notification signals.
Dry	Activate or deactivate washing with subsequent drying, or change the dryness level. →*Page 31*

9 Programmes

Note: The laundry's care labels provide you with additional information about programme selection.
→ *"Care symbols on the care labels", Page 28*

Programme	Description	Max. load (kg) Washing	Max. load (kg) Drying
Cottons ☼	Wash hard-wearing items made from cotton or linen. Also suitable as a short programme for normally soiled laundry when you activate Speed Perfect.	8.0 5.0 [1]	5.0

[1] **Speed Perfect** activated

Programme	Description	Max. load (kg) Washing	Max. load (kg) Drying
	Programme setting: ▪ Max. 90 °C ▪ Max. 1400 rpm		
Eco 40-60	Wash items made from cotton or linen. **Note:** Fabrics which can be washed from 40 °C 40 up to 60 °C 60 as per the care symbol can be washed together. The washing performance corresponds to the best possible washing performance class according to the legal requirements. For this programme, the washing temperature is automatically adjusted depending on the load size, in order to achieve the best possible energy efficiency with the best possible washing result. You cannot change the washing temperature. The maximum spin speed is 1400 rpm.	8.0	– [1]
Wash + Dry ☼	Wash and dry items made from cotton and linen. **Note:** Fabrics which can be washed from 40 °C 40 up to 60 °C 60 as per the care symbol can be washed together. The washing performance corresponds to the best possible washing performance class according to the legal requirements. For this programme, the washing temperature is automatically adjusted depending on the load size, in order to achieve the best possible energy efficiency with the best possible washing result. You cannot change the washing temperature. The maximum spin speed is 1400 rpm.	5.0	5.0
Easy Care ☼	Wash items made from synthetic fabrics. Programme setting: ▪ Max. 60 °C ▪ Max. 1200 rpm	4.0	2.5

[1] Drying not possible

Programme	Description	Max. load (kg) Washing	Max. load (kg) Drying
Mixed Load ☼	Wash items made from cotton, linen or synthetic fabrics. Suitable for lightly soiled laundry. Programme setting: ▪ Max. 90 °C ▪ Max. 1400 rpm	4.0	4.0
Delicate/Silk	Wash delicate, washable items made from silk, viscose and synthetic fabrics. Use a detergent that is suitable for delicates or silk. **Note:** Wash especially delicate items or items with hooks, eyelets or clips in a mesh laundry bag. Programme setting: ▪ Max. 30 °C ▪ Max. 800 rpm	2.0	– [1]
Wool	Hand- or machine-washable items that are made from wool or contain wool. To prevent the laundry from shrinking, the drum moves the items very gently with long pauses. Use a detergent that is suitable for wool. Programme setting: ▪ Max. 30 °C ▪ Max. 800 rpm	2.0	– [1]
Rinse/Spin	Rinse and then spin the laundry, and drain the water. Programme setting: Max. 1400 rpm	–	–
Spin/Drain	Spin the laundry and drain the water. Programme setting: Max. 1400 rpm	–	–
Memory	Set your saved programme with individual programme settings.	–	–
☼ Hygiene 65°	Wash hard-wearing items made from cotton or linen. Suitable for allergy sufferers and for strict hygiene requirements.	4.0	4.0

[1] Drying not possible

Programme	Description	Max. load (kg) Washing	Max. load (kg) Drying
	Note: Once the set temperature has been reached, it remains constant throughout the entire washing process. Programme setting: ▪ Max. 60 °C ▪ Max. 1400 rpm		
Drum Clean	Clean and care for the drum. →*Page 32* Use this programme in the following cases: ▪ Before using the appliance for the first time ▪ If you regularly wash at temperatures of 40 °C or lower ▪ After a prolonged period of non-use Use washing powder containing oxygen bleach. Add the washing powder containing oxygen bleach to compartment II for the main wash. →*Page 20* Halve the amount of detergent to avoid foaming. Do not use fabric softener. Do not use liquid detergent or detergent that is intended for woollens or delicates.	– [1]	– [2]
☼ Gentle Dry	Dry items made from synthetic fabrics. Gentle programme with low temperatures for delicate fabrics.	– [1]	2.5
☼ Intensive Dry	Dry items made from cotton or linen. Intensive programme with temperatures for hard-wearing fabrics.	– [1]	5.0
Hygiene Care ☼	Pre-treat delicate fabrics hygienically. The fabrics are pre-treated with hot steam up to 65 °C in order to kill bacteria. After the fabrics have been pre-treated, they are washed at low temperatures. Programme setting: ▪ Max. 90 °C ▪ Max. 1400 rpm	4.0	4.0

[1] Washing not possible
[2] Drying not possible

Programme	Description	Max. load (kg) Washing	Max. load (kg) Drying
☼ Super Quick 15' Wash & Dry 60'	Wash items made from cotton, linen or synthetic fabrics. Short programme for small items of lightly soiled laundry. **Note:** If you also want to dry the laundry after washing it, press Dry. Programme setting: ▪ Max. 30 °C ▪ Max. 800 rpm	2.0	1.0

10 Accessories

Use original accessories. These have been made especially for your appliance.

	Use	Order number
Elbow	Secure the water outlet hose in place.	00655300
Slide sheets	Makes it easier to insert the appliance into the installation recess.	00661827

11 Laundry

11.1 Preparing the laundry

⚠ **WARNING**
Risk of explosion!
Fillings made of polyamide, polyester, polyethylene, polypropylene or polystyrene can leak out of openings in items of laundry, melt during the drying process and cause an explosion in the appliance.
▸ Do not dry items of laundry with fillings made of polyamide, polyester, polyethylene, polypropylene or polystyrene in the appliance.

ATTENTION
Objects remaining in the laundry may damage the laundry and the drum.
▸ Remove all items from any pockets in your laundry before using the appliance.

Note
The appliance and fabrics are protected when you prepare your laundry.
▪ Brush off sand and soil
▪ Sort the laundry according to colour and textiles and observe the care labels
▪ Close all zips, hook and loop fasteners, hooks and eyes
▪ Tie cloth belts, cloth straps and cords together

- Remove curtain fittings and lead strips
- Wash small or particularly delicate items in a mesh washing bag
- Wash large and small items of laundry together
- Wash laundry with fresh stains immediately
- Pretreat laundry with dried stains and wash several times
- Load the laundry unfolded into the drum
- Spin the laundry before drying
- Before loading the drum, any laundry that has been pre-treated with chlorine bleach should be rinsed several times

11.2 Care symbols on the care labels

Washing care symbols

Symbol	Recommended programme
95 60 40 30	Cottons (normal)
60 40 30	Easy Care (gentle)
40 30	Delicates/Silk for washing by hand (particularly gentle)
	Woollens (hand wash)
	(not suitable for machine-washing)

Drying care symbols

Symbol	Fabrics
	Items made from cotton and linen, e.g. towels, bed linen, underwear
	Items made from synthetic, blended or delicate fabrics, e.g. functional garments, shirts
	Do not tumble dry items made from silk, nylon, air-impermeable and rubber-coated fabrics, synthetic curtains

12 Detergents and care products

You can protect your appliance and your laundry by selecting and using the correct detergents and care products.
The manufacturer's instructions for use and dosage can be found on the packaging.

Notes

- When using liquid detergents, only use liquid detergents that are self-flowing
- Do not mix different liquid detergents
- Do not mix detergent and fabric softener
- Do not use products that have expired or are highly congealed
- Do not use products containing solvents, caustic agents or volatile substances
- Do not use chlorine bleach
- Do not use dyes regularly as fixing salt can damage stainless steel
- Only use colour and dirt catcher sheets in a laundry net
- Do not use color-bleaching agents in the appliance

13 Basic operation

13.1 Switching on the appliance

Requirement: The appliance has been correctly installed and connected. →*Page 11*

- ▸ Press ⏻.
  The switch-on process takes a few seconds.

13.2 Setting a programme

1. Turn the programme selector and set the required programme. →*Page 23*
2. If required, adjust the programme settings. →*Page 23*
   The programme settings are not saved permanently for the programme.

13.3 Saving programme settings

You can save your individual programme settings as favourites.

Requirement: A programme is set. →*Page 29*

- ▸ Press and hold ☆ **3 sec.** for approx. 3 seconds.
  To call up the saved programme, set the **Memory** programme.

Note: To overwrite the saved programme, repeat the steps above.

13.4 Opening the door

1. Grip under the door handle and pull on the door.

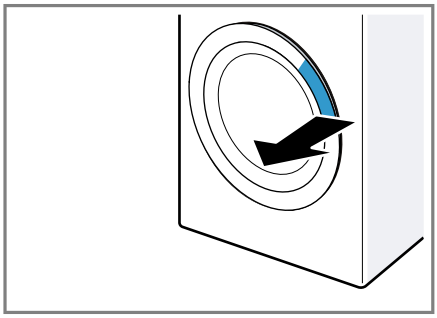

2. Open the door.

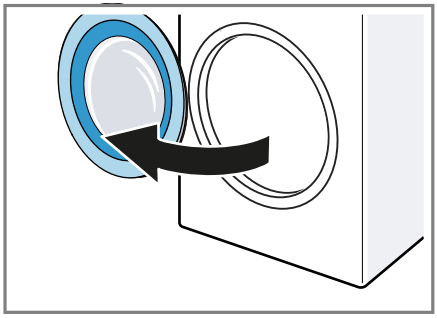

13.5 Loading laundry

Note: To prevent creasing, note the maximum load for the programmes. →*Page 23*

Requirements

- The laundry is prepared and sorted. →*Page 27*
- The drum is empty.

1. Open the door. →*Page 29*
2. Place the laundry in the drum.
3. Close the door.
   Ensure that there is no laundry trapped in the door.

13.6 Adding detergent and care product

Note: Observe the information about detergents and care products →*Page 28*.

1. Pull out the detergent drawer.
2. Pour in the detergent.
   → *"Detergent drawer", Page 20*
3. If required, add the care product.
4. Push in the detergent drawer.

13.7 Starting the programme

Requirements

- A programme is set. →*Page 29*
- The door is closed.

▸ Press ▷II.

✔ The display shows the programme duration or the programme end time.

✔ After the programme has ended, the display shows: "End".

13.8 Soaking laundry

Note: No additional detergent is required for soaking. The appliance uses the filled detergent for soaking and washing.

Requirements

- The laundry is placed in the appliance. →*Page 29*
- A programme has started. →*Page 30*

1. Press ▷II approx. 10 minutes after the programme start.
   The programme pauses and the laundry can soak.
2. Press ▷II after the required soaking time.

13.9 Adding laundry

After the programme starts, you can remove or add laundry depending on the programme status.

1. Press ⏻.

✔ The appliance switches off.

2. Switch on the appliance.
   →*Page 29*
   To open the door, wait for approx. 1 minute.
   Note: If you want to add laundry, follow the instructions on the display. →*Page 22*
3. Open the door. →*Page 29*
4. Add or remove laundry.
5. Close the door.
6. Start the programme. →*Page 30*

13.10 Cancelling the washing programme

1. Press ⏻.

✔ The appliance switches off.

2. Switch on the appliance.
   →*Page 29*
   To open the door, wait for approx. 1 minute.
3. Open the door. →*Page 29*
   The appliance door remains locked for safety reasons if the temperature and water levels are high.
   - If the temperature is high, start the **Rinse**/**Spin** programme.
   - If the water level is high, start the **Spin**/**Drain** programme or select a suitable programme for draining. →*Page 23*
4. Remove the laundry. →*Page 31*

13.11 Cancelling the drying programme

Note: The cooling process cools the laundry before the programme end so that the laundry is not damaged. Do not interrupt the programme, and wait for the door lock to open.
If you interrupt the programme, carefully open the door and allow warm air to escape. Remove the laundry

and spread out the items of laundry to cool.

1. Press ⏻.
✔ The appliance switches off.
2. Switch on the appliance.
→*Page 29*
To open the door, wait for approx. 1 minute.

13.12 Unloading the laundry

1. Open the door. →*Page 29*
2. Remove the laundry from the drum.

13.13 Switching off the appliance

1. Press ⏻.
2. Turn off the tap.
3. Cleaning the rubber gasket.
→*Page 35*

Note: Leave the appliance door and the detergent drawer open to dry.

14 Dryness level

In some programmes, a dryness level is predefined. The dryness level defines how dry or damp your laundry is after the programme ends.

Dryness level	Description
= (👕)	For normal, single-layered laundry.
– (👚)	The laundry is only slightly dried. To prevent creasing after drying, hang the laundry up.
– (🧺)	For normal, single-layered laundry. The laundry is still slightly damp after the programme ends. To prevent creasing after drying, iron the laundry or hang it up.

14.1 Changing the dryness level

For some programmes, you can change the dryness level so that your laundry will be drier or more damp.

1. Set a washing and drying programme or a drying programme.
→*Page 23*
✔ The display shows the specified dryness level.
2. Press **Dry** repeatedly until the display shows your required dryness level.

15 Childproof lock

Secure your appliance against being operated unintentionally using the controls.

15.1 Activating the childproof lock

▶ Press on both 🔒 **3 sec.** buttons for approx. 3 seconds.
✔ During the activation, "CL" flashes on the display.
✔ The display shows 🔒.
✔ The control elements are locked.
✔ The childproof lock remains active even after the appliance has been switched off and in the event of a power cut.

15.2 Deactivating the childproof lock

Requirement: To deactivate the childproof lock, the appliance must be switched on.

- ▸ Press on both 🔒 **3 sec.** buttons for approx. three seconds.
- ✔ 🔒 goes out on the display.

16 Cleaning and servicing

ATTENTION
Heavy, sharp or rough objects may damage the appliance.
- ▸ Do not use hard or sharp objects, abrasive cleaning products or steel wool for cleaning.
- ▸ Clean the appliance using only water and a soft cloth.

16.1 Cleaning the drum and cleaning fluff

Clean the drum if you have carried out 20 washing cycles at a temperature of 40 °C or lower, or if you have not used the appliance for a prolonged period, but at least once a year. Also clean the drum if you find fluff on the laundry after drying.

⚠ **CAUTION**
Risk of injury!
Permanently washing at low temperatures and a lack of ventilation for the appliance may damage the drum and cause injury.
- ▸ Regularly run a programme for cleaning the drum or wash at temperatures of at least 60 °C.
- ▸ Leave the appliance to dry after every operation with the door open, and leave the detergent drawer to dry.
- ▸ Run the **Drum Clean** programme without laundry but with washing powder that contains oxygen bleach or a cleaning agent for caring for the inside of the appliance.

Note: If you only want to clean fluff, you can do this without washing powder or cleaning agent.

16.2 Cleaning the detergent drawer

Note: Scan the QR code to see an animation of the process.

1. Pull out the detergent drawer.
2. Press down on the insert and remove the detergent drawer.

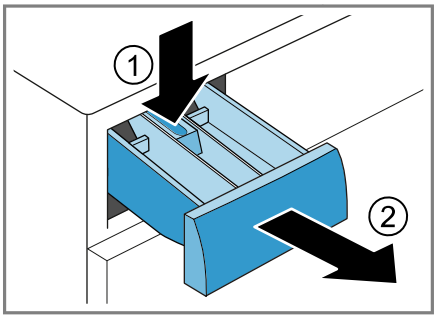

3. Pull out the insert upwards.

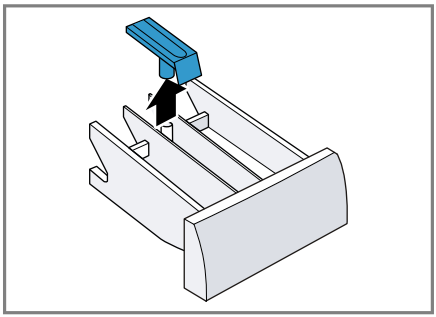

4. Clean the detergent drawer and insert with water and a brush, and then dry them.

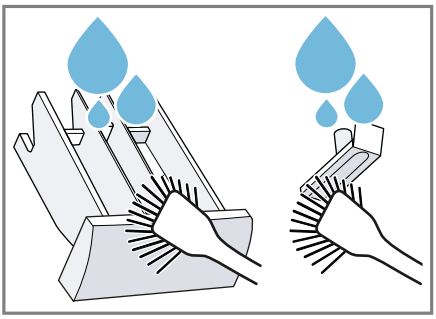

5. Fit the insert and click it into place.

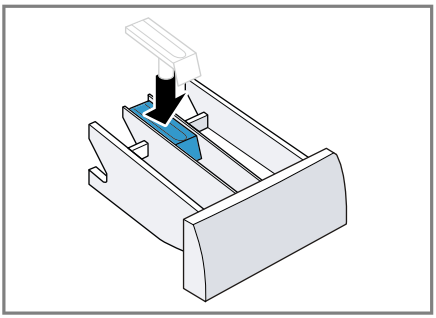

6. Clean the opening for the detergent drawer.

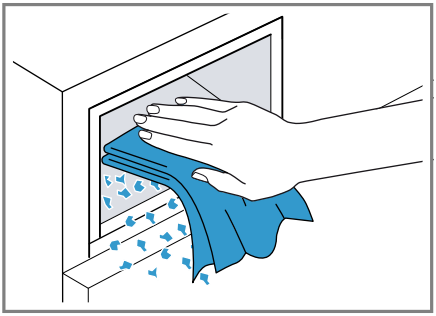

7. Push in the detergent drawer.

16.3 Cleaning the drain pump

Clean the drain pump regularly, at least once a year, as well as in the event of faults, e.g. blockages or rattling noises.

Note: Scan the QR code to see an animation of the process.
Observe the following safety instructions before you start the animation.

Emptying the drain pump

⚠ **CAUTION**
Risk of scalding!
When you wash at high temperatures, the detergent solution gets hot.
- ▸ Do not touch the hot detergent solution.

1. Turn off the tap.
2. Switch off the appliance. →*Page 31*
3. Disconnect the appliance's mains plug from the power supply.
4. Remove the base panel.
5. To drain the detergent solution, slide a suitable receptacle under the opening.

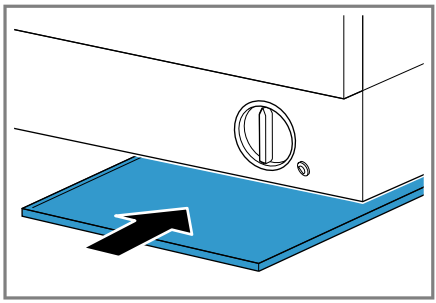

6. Pull the drain house out of the appliance.

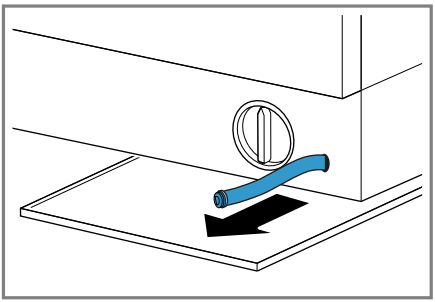

7. Remove the locking cap and allow the detergent solution to fully drain out into the receptacle.

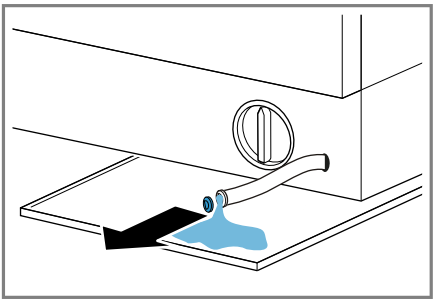

8. Push the locking cap onto the drain hose.

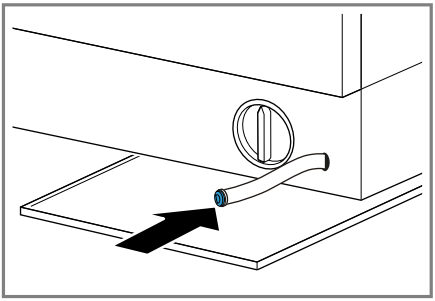

9. Push the drain hose into the appliance.

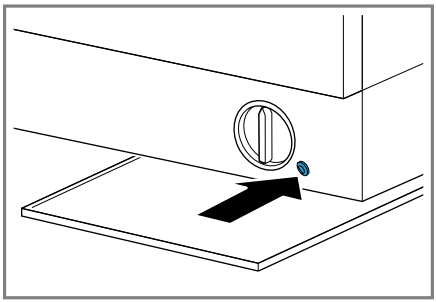

Cleaning the drain pump

Requirement: The drain pump is empty.

1. Since water may remain in the drain pump, unscrew ① and remove ② the pump cap carefully.
   - ▸ The filter insert in the pump housing may become stuck due to particles of dirt. Loosen the dirt and remove the filter insert.

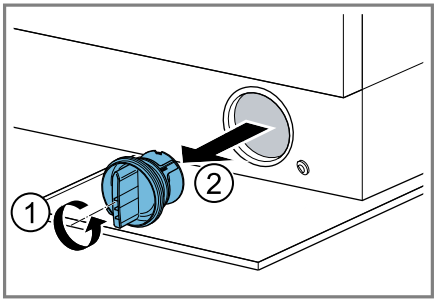

2. Clean the interior, the thread on the pump cap and the pump housing.

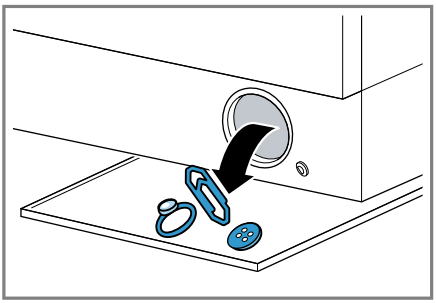

Colour and dirt catcher sheets can block the drain pump. Only use colour and dirt catcher sheets in a laundry net.

3. Ensure that the impeller in the drain pump can rotate.
4. Insert the pump cap and screw it on as far as it will go.

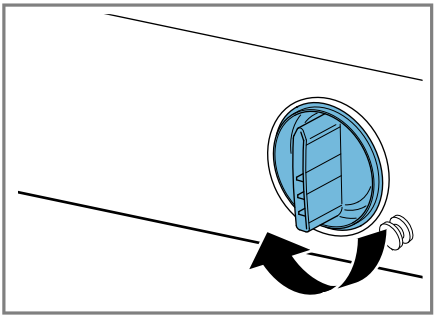

5. Empty the receptacle with the detergent solution.
6. Install the base panel.

Before the next wash

To prevent unused detergent from flowing straight into the outlet in the next wash, run a suitable programme for draining after you have emptied the drain pump.

1. Open the water tap.
2. Insert the mains plug.
3. Switch on the appliance.
4. Pour 1 litre of water into compartment II.
5. Select a suitable programme for draining. →*Page 23*

16.4 Cleaning the rubber gasket

Clean the rubber gasket regularly.

1. Open the door. →*Page 29*
2. Remove any foreign objects and fluff from the rubber gasket.

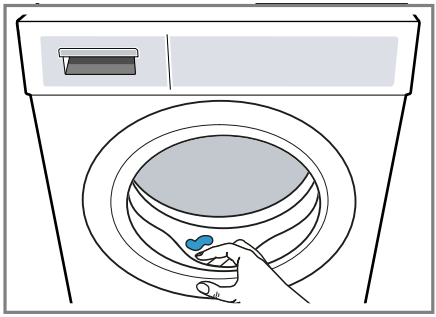

3. Clean the outside and the inside of the rubber gasket with a damp cloth and wipe dry.

17 Troubleshooting

You can rectify minor faults on your appliance yourself. Read the troubleshooting information before contacting after-sales service. This will avoid unnecessary costs.

⚠ WARNING
Risk of electric shock!
Improper repairs are dangerous.
- ▸ Never make any technical modifications to the appliance or its features.
- ▸ Repairs to the appliance should only be carried out by trained specialist staff.
- ▸ Only use genuine spare parts when repairing the appliance.
- ▸ If the power cord of this appliance is damaged, it must be replaced by the manufacturer, the manufacturer's Customer Service or a similarly qualified person in order to prevent any risk.

Fault	Cause and troubleshooting
E:21 The detergent solution is not being pumped out.	The water outlet hose is connected too high, is kinked or trapped, or has been extended impermissibly. ▸ Check the installation of the water outlet hose. →*Page 17*
	Drain pipe or water outlet hose is blocked. ▸ Clean the drain pipe and the water outlet hose.
	The drain pump is blocked or the pump cover is not installed correctly. ▸ Check that the pump cover is installed correctly. →*Page 33* ▸ Clean the drain pump. →*Page 33*
	Detergent dosage is too high. ▸ Reduce the amount of detergent for the next washing cycle with the same load.
E:10	The tap is turned off. ▸ Turn on the tap.
	The water inlet hose is kinked or jammed. ▸ Check the installation of the water inlet hose. →*Page 17*
	The filters in the water inflow are blocked. ▸ Clean the filters in the water inflow. Scan the QR code to see an animation of the process.
All other error codes.	Malfunction **1.** Restart the appliance.

Fault	Cause and troubleshooting
All other error codes.	**2.** If the fault occurs again, disconnect the appliance from the power supply for at least 30 seconds. Unplug the appliance from the mains or switch off the circuit breaker in the fuse box. **3.** If the fault persists, call customer service. →*Page 41* Please specify the exact error message when calling. If possible, document the fault with photos and videos.
Heavy foam build-up.	Detergent dosage is too high. ▸ Mix one tablespoon of fabric softener with 0.5 litres of water and pour the mixture into compartment II (not for outdoor clothing, sportswear or items stuffed with down). ▸ Reduce the amount of detergent for the next washing cycle with the same load.
"CL" flashes.	Childproof lock is activated. ▸ Deactivate the childproof lock. →*Page 31*
The programme does not start.	Childproof lock is activated. ▸ Deactivate the childproof lock. →*Page 31*
The programme is paused or has been interrupted, but the door will not open.	The temperature is too high. ▸ Start the **Rinse**/**Spin** programme or wait until the temperature has dropped.
	Water level is too high. ▸ Start the **Spin**/**Drain** programme or a suitable draining programme. →*Page 23*
The door cannot be opened due to a power cut.	The door is locked. ▸ To open the door, wait for approx. 1 minute.
Drum jerks after the programme starts.	Not a fault. An internal motor test is started. No action required.
No water is visible in the drum.	Not a fault. Water is below the visible area. No action required.
The appliance is vibrating, 'wandering' and making loud noises during the spin cycle.	Appliance is not correctly aligned. ▸ Align the appliance.
	The appliance feet are not fixed. ▸ Secure the appliance's feet.
	Transit bolts have not been removed. ▸ Remove the transit bolts.
High spin speed not reached.	The appliance is using a reduced spin speed to eliminate an imbalance. No action required.

Fault	Cause and troubleshooting
The programme duration changes during the wash cycle.	Not a fault. The programme sequence is optimised electronically or another rinse cycle is switched on due to heavy foam build-up. No action required.
The drying time is too long.	The ambient temperature is higher than 30 °C. ▸ Ensure that the ambient temperature is below 30 °C.
	The air circulation at the appliance's installation location is insufficient. ▸ Ventilate the appliance's installation location.
	Fluff has accumulated in the drum. ▸ Start the **Drum Clean** programme without any laundry or detergent.
Water intake during the drying phase.	Not a fault. The drying phase requires water. No action required.
Spinning during the drying phase.	Not a fault. Thermal spinning is active. No action required.
Whooshing, hissing, whirring or sucking noises.	Not a fault. Water is pumped in, the process fan is active, or detergent solution is pumped out. No action required.
Banging noises, rattling in the drain pump.	A foreign object is in the drain pump. ▸ Clean the drain pump. →*Page 33*
There are detergent residues on the laundry.	Detergents may contain water-insoluble substances that deposit on the laundry. ▸ Start the **Rinse/Spin** programme or brush out the laundry after drying.
Fluff on the laundry.	Fluff has accumulated in the drum. ▸ Start the **Drum Clean** programme without any laundry or detergent.
The laundry is too wet after the spinning cycle.	A low spin speed is selected. ▸ Start the **Spin/Drain** programme. ▸ The next time you run a wash cycle, set a higher spin speed.
	The appliance is using a reduced spin speed to eliminate an imbalance. **1.** Redistribute the laundry in the drum. **2.** Start the **Spin/Drain** programme.
The laundry is too damp.	The selected programme is unsuitable for the type of fabric. ▸ Set a suitable programme for subsequent drying. →*Page 23*

Fault	Cause and troubleshooting
The laundry is too damp.	The load is too large. ▸ Observe the programme's maximum load capacity. →*Page 23*
	After the end of the programme, warm laundry feels damper than it actually is. **1.** Remove the laundry from the drum as soon as the drying programme has finished. **2.** Spread the items of laundry for cooling.
	The selected dryness level is unsuitable. ▸ Change the dryness level. →*Page 31*
	The load is too small. ▸ Set a suitable programme for subsequent drying. →*Page 23*
	The laundry has not been spun sufficiently. ▸ Always select the highest possible spin speed for the washing programme in question.
Creasing.	The selected programme is unsuitable for the type of fabric. ▸ Set a suitable programme. →*Page 23*
	A high spin speed is selected. ▸ The next time you run a wash cycle, set a lower spin speed.
	The load is unsuitable. ▸ Observe the programme's maximum load capacity. →*Page 23* ▸ Prepare the laundry. →*Page 27*
	The laundry lies in the drum for too long after drying. **1.** Remove the laundry from the drum as soon as the drying programme has finished. **2.** Spread the items of laundry for cooling.
	Easy Care fabrics have been dried for too long. ▸ Change the dryness level. →*Page 31*
Water is leaking out at the water inlet hose.	The water inlet hose is not correctly connected or is damaged. ▸ Check the installation of the water inlet hose. →*Page 11* Replace the water inlet hose if it is damaged.

Fault	Cause and troubleshooting
Water is leaking out at the water outlet hose. E:11	The water outlet hose is not connected correctly or is damaged. ▸ Check the installation of the water outlet hose. →*Page 11* Replace the water outlet hose if it is damaged.
Water is leaking from below the door.	Dirt on the door or seal causes leaks. ▸ Clean the door and the seal.
Detergent or fabric softener drips off the seal and collects on the door or in the seal fold.	There is too much detergent or fabric softener in the detergent drawer. ▸ When dosing, observe the marking in the detergent drawer. →*Page 30*
Residual water is present in the compartment .	Insert in compartment ❀ is blocked. ▸ Clean the detergent drawer. →*Page 32*
Fabric softener remains in the detergent drawer.	The use of fabric softener is not supported for the selected programme. ▸ Check whether the use of fabric softener is supported for the selected programme. →*Page 23*
Odours have formed in the appliance.	Humidity and detergent residue may promote the formation of bacteria. ▸ Clean the drum. →*Page 32* ▸ If you are not using the appliance, leave the door and detergent drawer open so that residual water can evaporate.

18 Transportation, storage and disposal

18.1 Removing the appliance

1. Turn off the tap.
2. Switch off the appliance. →*Page 31*
3. Unplug the appliance's mains plug.
4. Drain the water. → *"Cleaning the drain pump", Page 33*
5. Detach the hoses.

18.2 Inserting the transit bolts

Secure the appliance before transportation using transit bolts in order to prevent transport damage.

1. Use a screwdriver to remove the 4 cover caps.
   Keep the cover caps.
2. Insert the 4 transit bolts.

18.3 Using the appliance again

▸ For further information, see Installation and connection →*Page 11* and Starting an empty washing cycle →*Page 18*.

18.4 Disposing of old appliance

Valuable raw materials can be reused by recycling.

⚠ **WARNING**
Risk of harm to health!
Children can lock themselves in the appliance, thereby putting their lives at risk.

- The appliance must not be set up behind a lockable door, a sliding door or a door with a hinge on the side opposite to the appliance, which prevents appliance from opening fully.
- With redundant appliances, unplug the power cord. Then cut through the cord and damage the lock on the appliance door beyond repair so that the appliance door will no longer close.

1. Unplug the appliance from the mains.
2. Cut through the power cord.
3. Dispose of the appliance in an environmentally friendly manner. Information about current disposal methods are available from your specialist dealer or local authority.

19 Customer Service

You can obtain function-relevant and storable genuine spare parts from our Customer Service for up to 15 years from the date on which your appliance was placed on the market. For more information, please contact our Customer Service team.
Detailed information about the warranty period and the warranty conditions in your country is available via the QR code on the enclosed document on service contacts and warranty conditions, from our customer service or on our website.
You can find the contact details for our customer service via the QR code on the enclosed document on service contacts and warranty conditions or on our website.

19.1 Product number (E-Nr.) and production number (FD)

If you contact Customer Service, you will require the product number (E-Nr.) and the production number (FD), which you can find on the appliance's rating plate.

Depending on the model, the rating plate is located:

- On the inside of the door.
- Underneath the drum opening.
- On the inside of the maintenance flap.
- On the rear of the appliance.

Make a note of your appliance's details and the Customer Service telephone number to find them again quickly.

20 Consumption values

The following information is provided in accordance with the EU Ecodesign Regulation. The values specified for programmes other than **Eco 40-60** and **Wash + Dry** ☼ are only given as a guide and were determined in accordance with the applicable standards EN60456 and EN62512.

Programme	Load (kg)	Programme duration (h:min) [1]	Energy consumption (kWh/cycle) [1]	Water consumption (l/cycle) [1]	Maximum temperature (°C) 5 mins [1]	Spin speed (rpm) [1]	Residual moisture (%) [1]
Eco 40-60 [2]	8.0	3:38	0.760	65.0	33	1400	53.00
Eco 40-60 [2]	4.0	2:48	0.415	43.0	31	1400	53.00
Eco 40-60 [2]	2.0	2:38	0.205	33.0	25	1400	53.00
Wash + Dry ☼ [2]	5.0	9:20	4.000	93.0	35	-	-0.1
Wash + Dry ☼ [2]	2.5	6:30	2.100	60.0	28	-	-0.1
Cottons ☼ 20 °C	8.0	1:29	0.279	78.0	20	1400	53.00
Cottons ☼ 40 °C	8.0	1:30	0.772	78.0	40	1400	53.00
Cottons ☼ 60 °C	8.0	1:45	1.289	78.0	60	1400	53.00
Easy Care ☼ 40 °C	4.0	1:27	0.560	60.0	40	1000	35.00
Mixed Load ☼ 40 °C	8.0	1:22	0.810	78.0	40	1000	65.00
Wool 30 °C	2.0	1:00	0.330	60.0	30	600	80.00

21 Technical data

Appliance height	82.5 cm
Appliance width	59.5 cm
Appliance depth	52.5 cm
Appliance depth with door closed	54.0 cm
Appliance depth with door open	97.5 cm

Weight	56.6 kg
Maximum load	8.0 kg
Mains voltage	220-240 V, 50 Hz
⎓ Minimum installation protection	10 A
Nominal power	1900 W
Power consumption	▪ Off mode: 0.50 W

[1] Due to the influence of water pressure, hardness and inlet temperature, ambient temperature, type, amount and soiling of laundry, detergent used, fluctuations in the power supply and the selected additional functions, the actual values may deviate from the stated values.

[2] Test programme in accordance with the EU Ecodesign Directive and the EU Energy Labelling Regulation with cold water (15 °C).

Water pressure	▪ Minimum: 100 kPa (1 bar) ▪ Maximum: 1000 kPa (10 bar)
Length of the water inlet hose	150 cm
Length of the water outlet hose	120 cm
Length of the power cord	150 cm

Many thanks for choosing a Bosch home appliance!

Register your new appliance now on MyBosch and benefit directly from:

- **Expert advice and tips to make the most of your appliance**
- **Options for warranty extension**
- **Discounts on spare parts and accessories**
- **Digital information for use and all appliance data to hand**
- **Easy access to Bosch Home Appliance Service**

Simple to register, free of charge – including on mobile devices:
www.bosch-home.com/welcome

Need some help? You can find it here.

Expert advice on your Bosch home appliances, help with problems or repairs by professionals from Bosch.

Discover all the different ways Bosch can assist you:
www.bosch-home.com/service

The contact details of all countries are listed in the attached service directory.

BSH Hausgeräte GmbH
Carl-Wery-Straße 34
81739 München, GERMANY
www.bosch-home.com

A Bosch Company

9001995377 (060327)
en

WKD28260ME